HEWLETT PACKARD

SERVICE MANUAL

7470A
GRAPHICS PLOTTER

SERIAL NUMBERS

This manual applies directly to plotters with serial numbers prefixed 2250.

For additional information about serial numbers and different serial prefixes, see PLOTTERS COVERED BY MANUAL in Section I.

©1982 by HEWLETT-PACKARD COMPANY
16399 W. BERNARDO DRIVE, SAN DIEGO, CALIFORNIA 92127

MANUAL PART NO. 07470-90000
Microfiche Part No. 07470-90050

Printed: JANUARY 1982

Revision B: September 1982

Table of Revised Pages

REVISION	REVISED PAGES				REASON
A April 1982	3-3* 3-4* 3-5* 3-6*	3-10* 3-11* 5-6* 5-7*	5-8* 5-9* 5-11* 5-25*	5-27* 5-31*	Errata
B September 1982 Serial Prefix 2250	1-4* 3-2* 3-4 3-5*	3-7* 3-8* 3-9* 3-10*	5-10* 5-25 5-29* 5-31*		Change 1 replaces two RAM ICs with one IC and adds a decoder IC and a gate IC on the RS-232-C PCA.

NOTE

PAGE NUMBERS WITH AN * SUFFIX HAVE ERRATA CHANGES ONLY

TABLE OF CONTENTS

Section		Page
I	GENERAL INFORMATION	1-1
1-1.	Introduction	1-1
1-5.	Specifications	1-1
1-7.	Safety Considerations	1-1
1-9.	What Does This Plotter Do?	1-1
1-13.	Line Voltage and Fuse Selection	1-1
1-17.	Grounding Requirements	1-4
1-19.	Plotters Covered by Manual	1-4
1-24.	Options	1-4
1-28.	Accessories Supplied	1-4
1-30.	Packaging for Shipment	1-4
II	PERFORMANCE TESTS	2-1
2-1.	Introduction	2-1
2-3.	Basic Operating Test	2-1
2-5.	Hewlett-Packard Graphics Language	2-1
2-7.	Test Program	2-1
III	REPLACEABLE PARTS	3-1
3-1.	Introduction	3-1
3-3.	Exchange Assemblies	3-1
3-5.	Replaceable Parts List	3-1
3-7.	Ordering Information	3-1
3-9.	Code List of Manufacturers	3-1
3-11.	Designations and Abbreviations	3-1
IV	MANUAL CHANGES	4-1
V	SERVICE	5-1
5-1.	Introduction	5-1
5-3.	Basically, This Is How It Works	5-1
5-7.	RS-232-C/CCITT V.24 Interface (Option 001)	5-1
5-12.	Rear Panel Switches (Option 001)	5-1
5-17.	HP-IB Interface (Option 002)	5-2
5-22.	Rear Panel Switches (Option 002)	5-3
5-25.	Hewlett-Packard Interface Loop (Option 003)	5-3
5-28.	Rear Panel US/A4 Switch (Option 003)	5-3
5-30.	Processor	5-3
5-34.	Read Only Memory	5-4
5-36.	Random Access Memory	5-4
5-38.	Gate Arrays A and B	5-4
5-40.	Motor Supply Voltage Comparator	5-4
5-43.	Motor Servo Systems	5-5
5-47.	Motor Current Sensor	5-5
5-49.	Pen Down Circuit	5-5
5-51.	Parts Removal and Replacement	5-6
5-52.	Top Case	5-6
5-53.	Paper Drive Motor Assembly (Figure 5-5)	5-6
5-54.	Pen Solenoid (Figure 5-5)	5-6
5-55.	Pen Drive Motor and Belt	5-6
5-56.	Pen Carriage, Pen Holder, and Damper	5-9
5-57.	Pen Stables	5-9
5-58.	Pinch Rollers	5-9
5-59.	Printed Circuit Assembly	5-10
5-60.	Pinch Roller Mechanism and Paper Drive Shaft	5-10
5-61.	Power Module and Transformer	5-12
5-62.	Power Module Wiring	5-12
5-64.	Recommended Test Equipment	5-12
5-66.	Troubleshooting	5-13
5-68.	Exchange Printed Circuit Assembly	5-13
5-70.	Drive Motors and Pen Solenoid	5-13
5-72.	Troubleshooting Table	5-14
5-74.	Test A	5-14
5-76.	Test B (See Table 5-5)	5-14
5-78.	Diagrams	5-14

TABLES

Table		Page
1-1.	Specifications	1-1
1-2.	Line Voltage Selection	1-2
1-3.	Line Fuses	1-4
1-4.	Accessories Supplied	1-6
2-1.	7470A HP-GL Instruction Set	2-2
3-1.	Parts List, Main PCA, RS-323-C, Option 001	3-2
3-2.	Parts List, Main PCA, HP-IB, Option 002	3-5
3-3.	Parts List, Main PCA, HP-IL, Option 003	3-7
3-4.	Parts List, Replaceable Mechanical Parts	3-10
3-5.	Manufacturers' Code List	3-12
3-6.	Reference Designations and Abbreviations	3-13
5-1.	RS-232-C/CCITT V.24 Interface Signal Levels	5-1
5-2.	Baud Rate Selection	5-2
5-3.	HP-IB Interface Lines	5-3
5-4.	Recommended Test Equipment	5-13
5-5.	Troubleshooting	5-15

ILLUSTRATIONS

Figure		Page
1-1.	Top Case Removal	1-2
1-2.	Line Voltage Selection	1-3
1-3.	Power Cord Configurations	1-5
2-1.	Test Program	2-4
2-2.	Performance Verification Plot	2-6
3-1.	Exploded View	3-11
5-1.	RS-232-C/CCITT V.24 Interface Circuits	5-2
5-2.	HP-IL Interface Circuits	5-4
5-3.	Servo System Block Diagram	5-5
5-4.	Top Case Removal	5-6
5-5.	Paper Drive Motor and Pen Solenoid	5-7
5-6.	Pen Drive	5-8
5-7.	Pen Stables	5-10
5-8.	Pinch Rollers	5-10
5-9.	Chassis Assembly Removal	5-11
5-10.	Under Side of Chassis Assembly	5-11
5-11.	Power Module Removal	5-12
5-12.	Power Module Wiring	5-13
5-13.	Schematic Diagram Notes	5-16
5-14.	ANSI Y32.14 Logic Symbols	5-18
5-15.	Schematic Diagram, RS-232-C, Option 001	5-25
5-16.	Schematic Diagram, HP-IB, Option 002	5-27
5-17.	Schematic Diagram, HP-IL, Option 003	5-29
5-18.	Schematic Diagram, Power Supplies	5-31

SECTION I

GENERAL INFORMATION

1-1. INTRODUCTION

1-2. This service manual contains information necessary to test and service the Hewlett-Packard Model 7470A Plotter. This manual is divided into five sections as follows:

I — General Information
II — Performance Tests
III — Replaceable Parts
IV — Manual Changes
V — Service

1-3. Information for interfacing and operating the Model 7470A will be found in the following:

Title	HP Part Number
Interfacing and Programming Manual	07470-90001
Operating Manual	07470-90002
Interconnection Guide	07470-90003
Programmer's Reference Card	07470-90004

1-4. This General Information section contains the specifications and option and accessory information.

1-5. SPECIFICATIONS

1-6. Table 1-1 lists the specifications for the Model 7470A. These specifications include the performance standards against which the plotter is tested.

1-7. SAFETY CONSIDERATIONS

1-8. Safety information relevant to the service procedure being described is provided in the appropriate sections of this manual. The Model 7470A and this manual should be reviewed for safety markings and instructions before service work is begun.

1-9. WHAT DOES THIS PLOTTER DO?

1-10. The Model 7470A accepts digital information to produce graphic plots on 8-½ × 11 in. or ISO A4 (210 × 297 mm) paper or special transparency plastic. Disposable pens are available in various ink colors.

1-11. The two-pen capability permits more than one color to be used in a plot without the necessity of stopping the plotter to change pens manually. Pens are automatically capped when in the pen stables. A pen that is in the pen carriage will be automatically replaced in its stable when the PAPER LOAD/HOLD lever is moved to the LOAD position. Either pen may be selected by program control or by pressing the PEN LEFT (1) or PEN RIGHT (2) button. To replace a pen in its stable, hold the ENTER button down while pressing the appropriate pen select button.

Table 1-1. Specifications

MAXIMUM PLOTTING AREA
Y axis: 190 mm (7.5 in.)
X axis: 273 mm (10.7 in.) metric
258 mm (10.2 in.) English

REPEATIBILITY
With the same pen: 0.1 mm (0.004 in.)
With a different pen: 0.2 mm (0.008 in.)

PEN VELOCITY
Pen down: maximum, 38.1 cm/s (15 in./s)
programmable, 1 to 38 cm/s in 1 cm/s increments
Pen up: 50.8 cm/s (20 in./s)

ADDRESSABLE STEP SIZE
0.025 mm (0.00098 in.)

ACCELERATION
Approximately 2 g

POWER REQUIREMENTS
Source: 100, 120, 220, or 240 V~ −10%, +5%
Frequency: 48 to 66 Hz
Consumption: 25 W maximum

SIZE
Length: 432 mm (17 in.)
Width: 343 mm (13.5 in.)
Height: 127 mm (5 in.)

WEIGHT
5.7 kg (12.5 lb)

1-12. Seven different line types are provided. Labeling can be done in five character sets plus user-defined characters (except in HP-IL Option 003). Text (labeling) can be written in any direction, upright or slanted. Character size is also variable.

1-13. LINE VOLTAGE AND FUSE SELECTION

CAUTION

To prevent damage to the plotter, make sure the line voltage selection and fuse protection is correct before connecting line power.

WARNING

The line power cord and power outlet must have a protective earth (ground) contact.

1-14. The 7470A primary power circuit can be configured to operate from any one of the following power sources at a line frequency of 48 to 66 Hz, single phase. Maximum power used is 25 W.

100 V~ −10%, +5%
120 V~ −10%, +5%
220 V~ −10%, +5%
240 V~ −10%, +5%

1-15. Line voltage selection is identified on the label visible in the small recessed window in the rear panel.

CAUTION

Applying line voltage of 220 V or 240 V to the plotter while the line voltage selection is set for 100 V or 120 V operation may damage the plotter circuits.

1-16. The line voltage selection may be changed to conform to the line voltage in a particular area. Use the following procedure.

WARNING

The following procedure should be performed only by service-trained personnel who are aware of the electrical shock hazards involved.

a. Set the plotter LINE switch to OFF (O) and disconnect the line cord.

b. Remove the plotter top case by removing the screws indicated in Figure 1-1. Lift the rear of the top case and the front will release. When replacing, make sure the PAPER HOLD lever extends through the case, and the tabs inside the front of the top case align properly above and below the base plate.

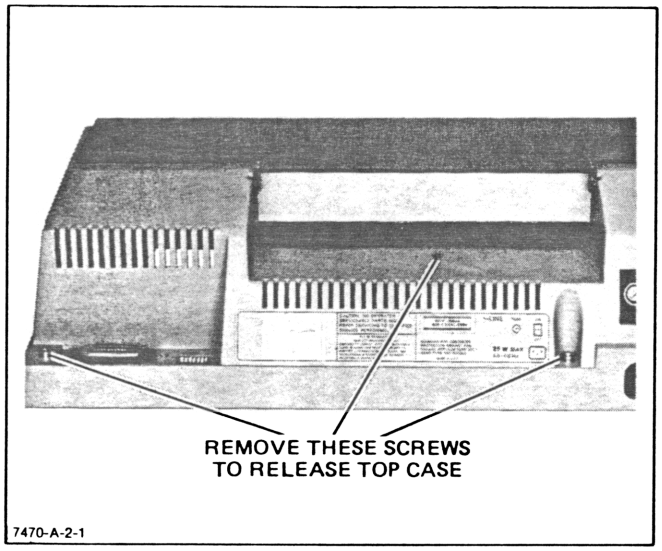

Figure 1-1. Top Case Removal

c. Line voltage selection is determined by the power input connections to the transformer primary windings. Table 1-2 lists the wire colors and transformer contact connections for each line voltage. The transformer pin numbers are identified on the power module molding. Figure 1-2 illustrates the connections for each voltage. Change the wire connections as required to conform to the desired line voltage selection.

CAUTION

Make sure the line fuse is correct according to Table 1-3. The fuse holder cap is the bayonet type. Press and turn counterclockwise to remove, clockwise to lock.

d. Change the position of the line voltage label block so that the voltage selected is right side up. This block snaps in and out of the power module molding.

Table 1-2. Line Voltage Selection

NOMINAL LINE VOLTAGE	TRANSFORMER PRIMARY CONNECTIONS*						
	PIN 1	PIN 2	PIN 3	PIN 4	PIN 5	PIN 6	PIN 7
100 V	8	928	958	8	958	NC	928
120 V	8	NC	928	8	928	958	958
220 V	8	958	NC	958	928	8	928
240 V	8	NC	958	958	928	8	928

*Wire identification is by color code:
8 = GRY
928 = WHT/RED/GRY
958 = WHT/GRN/GRY

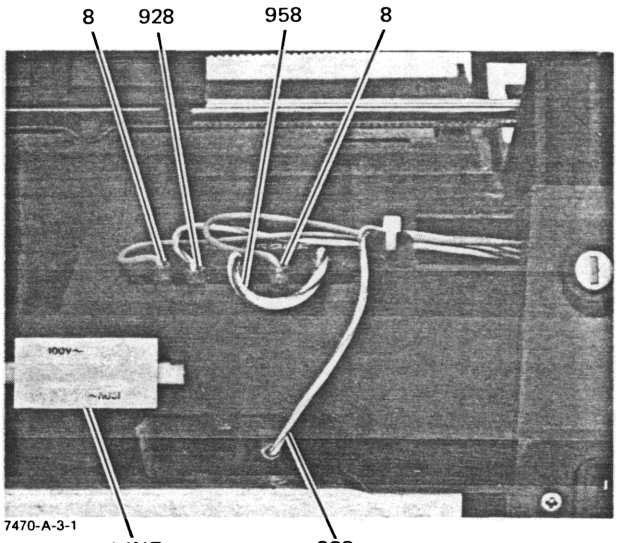

DETAIL A – 100V

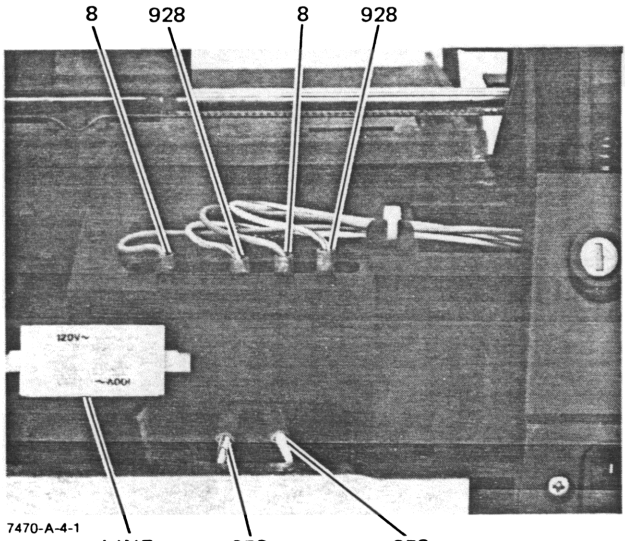

DETAIL B – 120V

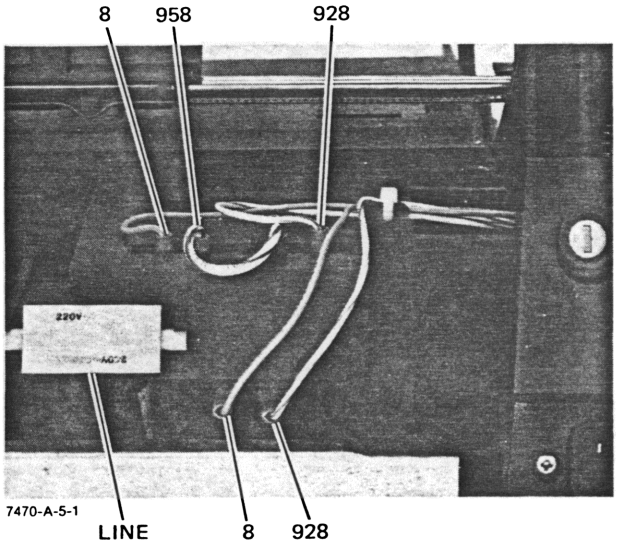

DETAIL C – 220V

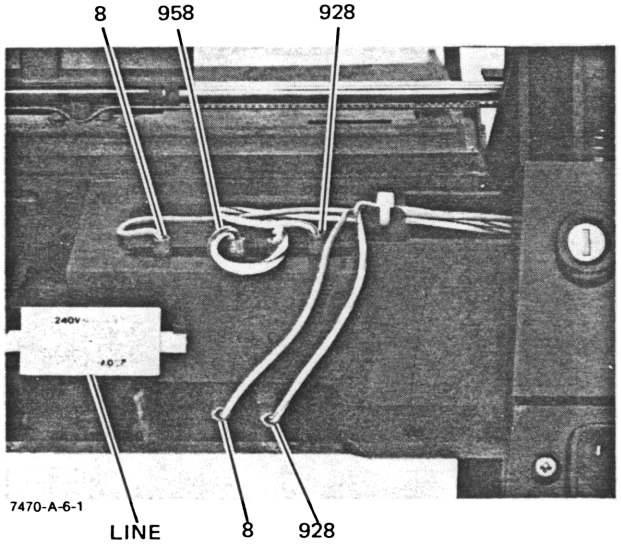

DETAIL D – 240V

WIRE IDENTIFICATION IS BY COLOR CODE:

8 = GRY
928 = WHT/RED/GRY
958 = WHT/GRN/GRY

CAUTION

MAKE SURE CORRECT FUSE IS INSTALLED. REFER TO TABLE 1-3.

Figure 1-2. Line Voltage Selection

Table 1-3. Line Fuses

LINE VOLTAGE	FUSE RATING	FUSE HP PART NUMBER	FUSEHOLDER CAP HP PART NUMBER
100/120 V	0.6 AT	2110-0016	2110-0565
*220/240 V (0.25 × 1.25 in.)	0.3 AT	2110-0044	2110-0565
(5 × 20 mm)	0.315 AT	2110-0639	2110-0567

E *Either Part No. 2110-0044 or 2110-0639 will provide adequate protection. Part No. 2110-0044 is a standard U.S. fuse
E for 240 V line; Part No. 2110-0639 is a standard European fuse for 220 V line.

e. Replace the top case, making sure it fits properly on the front edge of the base and the PAPER HOLD lever extends through the case.

f. Install the proper power cord for the power range selected and type of mains outlet to which the cord is to be connected (see Figure 1-3).

1-17. GROUNDING REQUIREMENTS

1-18. To protect operating personnel, the plotter must be properly grounded. It is supplied with a three-conductor power cable which, when connected to an appropriate power outlet, grounds the plotter. To preserve this protection feature, do not operate the plotter from a power outlet which has no grounded connection.

1-19. PLOTTERS COVERED BY MANUAL

1-20. The plotter serial number is located on the rear panel. Hewlett-Packard uses a two-part serial number consisting of a four-digit prefix and a five-digit suffix separated by a letter (0000A00000). The prefix is the same for all identical plotters and changes only when a modification is made that affects parts compatibility. The suffix is assigned sequentially and is different for each plotter. This manual applies directly to plotters with the serial prefix shown on the title page.

1-21. If the serial number prefix of your plotter is higher than the one shown, one or more update packages of revised pages are supplied with the manual. Use the new pages to replace the original pages, and insert the old pages in the Manual Changes section of this manual. If two or more update packages are supplied, insert them in order by revision letter; that is, Revision A first, then Revision B, etc. The title page will then show the latest serial prefix and the manual will apply directly to plotters with that prefix.

1-22. If the plotter at hand has a lower serial prefix than the one shown on the title page, information in the Manual Changes section will adapt this manual to that plotter. To maintain this feature, it is necessary that when revised pages are inserted in the manual, the old pages be added to this section.

1-23. In addition to plotter changes, revised pages may correct errors in the manual or include improved procedures. To keep this manual as accurate as possible, Hewlett-Packard recommends that you periodically request all update packages with letter designation higher than any that you may already have. A table of revised pages on the back of the title page will show the revisions you presently have. When requesting update packages, always refer to the manual by title, plotter model number, and the manual print date which is shown on the title page.

1-24. OPTIONS

1-25. The Model 7470A is available with one of three types of interface, designated as the following options:

Option 001	RS-232-C/CCITT V.24
Option 002	Hewlett-Packard Interface Bus
Option 003	Hewlett-Packard Interface Loop

1-26. Option 016 provides a special "eavesdrop" cable for Option 001.

1-27. The line voltage selection ordered is designated as one of the following:

Option 010	100 V~
Option 012	120 V~
Option 022	220 V~
Option 024	240 V~

1-28. ACCESSORIES SUPPLIED

1-29. The items listed in Table 1-4 are supplied with each plotter.

1-30. PACKAGING FOR SHIPMENT

1-31. If the plotter is being returned to Hewlett-Packard for service, attach a tag indicating the type of service required, model number, full serial number, and your return address. Also include all of this information in any correspondence.

		Option No.
BS 1363A 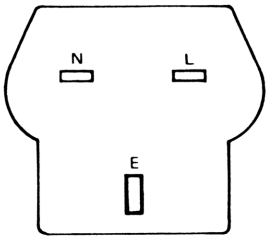	HP Part Number 8120-1351; 250 V, 13 A, 1 ϕ plug rating. For use in United Kingdom, Cyprus, Nigeria, Rhodesia, Singapore.	900
AS C112 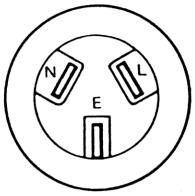	HP Part Number 8120-1369; 250 V, 10 A, 1 ϕ plug rating. For use in Australia, New Zealand.	901
CEE 7-VII 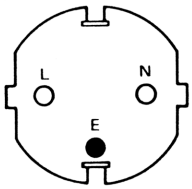	HP Part Number 8120-1689; 250 V, 10/16 A, 1 ϕ plug rating. For use in East and West Europe, Saudi Arabia, Egypt, South Africa, India.	902
NEMA 5-15P 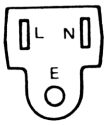	HP Part Number 8120-1378; 125 V, 15 A, 1 ϕ plug rating. For use in Canada, Japan, Mexico, Philippines, Taiwan, UL approved in United States.	903
NEMA 6-15P 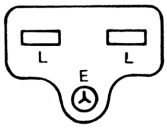	HP Part Number 8120-0698; 250 V, 15 A, 1 ϕ plug rating. For use in Canada, UL approved in United States.	904
SEV 1011 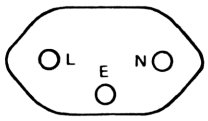	HP Part Number 8120-2104; 250 V, 10 A, 1 ϕ plug rating. For use in Switzerland.	906
DHCK-107 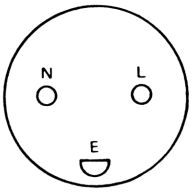	HP Part Number 8120-2956; 250 V, 10 A, 1 ϕ plug rating. For use in Denmark.	912

NOTE: All plugs are viewed from connector end.

- • = L Line or Active Conductor (also called "live" or "hot")
- • = N Neutral or Identified Conductor
- • = E Earth or Safety Ground

1-A-18-3

Figure 1-3. Power Cord Configurations

Table 1-4. Accessories Supplied

DESCRIPTION	QTY	HP PART NUMBER
*Interfacing and Programming Manual	1	07470-90001
Operating Manual	1	07470-90002
Interconnection Guide	1	07470-90003
Programmer's Reference Card	1	07470-90004
**Plotter paper, pad, 8-½ × 11 in., 50 sheets	1	9280-0589
Package of 4 fiber tip pens, 0.3 mm nib width, 1 each red, blue, green, black	1	5060-6810

*Supplied with Option 001 only.
**Paper size A4 (210 × 297 mm) HP Part No. 9280-0588 may be supplied, based on the destination of the plotter.

1-32. If the original packaging material has been retained, pack the plotter in the same manner as it was received. The following general instructions should be used for packing with commercially available materials.

a. Wrap the plotter in heavy paper or plastic.

b. Use a strong shipping container.

c. Use a layer of shock-absorbing material at least 70 to 100 mm (3 to 4 in.) thick around all sides of the plotter to provide firm cushioning and prevent movement inside the container.

d. Seal container securely. Mark container FRAGILE to ensure careful handling.

SECTION II

PERFORMANCE TESTS

2-1. INTRODUCTION

2-2. The following information is provided to determine whether the plotter is operating properly. If operation is not correct, refer to Section V of this manual for service information.

2-3. BASIC OPERATING TEST

2-4. The front panel controls can be used to test basic operation of the plotter; however, this procedure does not test the I/O circuits.

a. Make sure pens are installed in both pen stables.

CAUTION

Before applying power to the plotter, check the line voltage selection (visible through the small window in the rear panel) and make sure the selected line voltage and fuse value are correct. If not, refer to Line Voltage and Fuse Selection in Section I.

b. Apply power to the plotter.

c. With the PAPER LOAD lever in the LOAD position, place a sheet of paper (8-½ × 11 in. or ISO A4) against the left-hand rail and the rear stop. Lower the lever to the PAPER HOLD position.

d. Operate each of the front panel controls. Vertical, horizontal and diagonal lines (using the directional controls with a pen down) should be smooth.

NOTES

If the pen is down, it will lift when either P1 or P2 is pressed.

The VIEW pushbutton is a latching control. After VIEW is pressed once, the other controls will not operate until VIEW is pressed a second time. The ERROR light should be on when in the VIEW mode.

The ERROR light should be on when the PAPER lever is in the LOAD position. If P1 or P2 is pressed while the lever is in LOAD, the ERROR light should flash. This error may be cleared by moving the lever to HOLD and back to LOAD, or by pressing ENTER and VIEW at the same time, in which case the plotter initializes again.

While the plotter is ON, and the PAPER lever is in the HOLD position, the ERROR light flashes very briefly approximately every five seconds when the motor power supply voltage is sensed.

2-5. HEWLETT-PACKARD GRAPHICS LANGUAGE

2-6. The Model 7470A recognizes the Hewlett-Packard Graphic Language (HP-GL) instructions listed in Table 2-1.

2-7. TEST PROGRAM

2-8. The program in Figure 2-1 is written in BASIC language specifically for the HP Model 85 Personal Computer but may be adapted to other controllers. This program tests the Input/Output circuits of the 7470A and the majority of the logic circuits, as well as the operation of the paper and pen drive mechanisms. The resultant plot is illustrated in Figure 2-2.

NOTE

Lines beginning with an exclamation point are only explanatory and not part of the plot program. Those lines may be omitted when entering the program.

The addresses shown in lines 110, 120, and 130 are only examples, and may vary with the system or computer used. For example, the address for a plotter connected in a Hewlett-Packard Interface Loop depends upon its location in the loop. In this example (line 130), the plotter is assumed to be in position 1 (next to the computer or the only device in the loop aside from the computer). If the plotter is in position 2, the address would be 902, etc.

Table 2-1. 7470A HP-GL Instruction Set

INSTRUCTION	DEFINITION
VECTOR GROUP	
PA x,y(,x,y(,...))	Plot absolute (integer format, −32768 to +32767)
PR x,y(,x,y(,...))	Plot relative (integer format, −32768 to +32767)
PU (x,y,...)	Pen up
PD (x,y,...)	Pen down
CHARACTER GROUP	
CA n	Designate alternate character set (n = integer from 0 to 4)
CP spaces, lines	Character plot (decimal format, −128 to +127.9999)
CS m	Designate standard set (m = integer, 0 to 4)
DI run, rise	Absolute direction (decimal format −128 to +127.9999)
DR run, rise	Relative direction (decimal format −128 to +127.9999)
LB c.... c	Label ASCII string (c = ASCII characters)
SA	Select alternate character set
SI wide, high	Absolute character size (decimal format in centimetres)
SL tan angle (+ or −)	Absolute character slant from vertical (decimal format, tangent of angle from vertical)
SR wide, high	Relative character size (decimal format, percentage of P2x − P1x and P2y − P1y)
SS	Select standard character set
*UC (pen,)x,y,pen(,...)	User-defined character
LINE TYPE GROUP	
LT t(,l)	Line type (integer 0 — 6), length (decimal format, 0 — 127.999, percentage of distance from P1 to P2)
SM c	Symbol mode (c = ASCII character)
VS v	Velocity select (decimal format, 0 — 38.1, cm/s)
SP n	Select pen (integer format)
DIGITIZE GROUP	
DC	Digitize clear
DP	Digitize point
OC	Output current position and pen status
OD	Output digitized point and pen status
AXES GROUP	
TL tp(,tn)	Tick length (tp = positive length, tn = negative length)
XT	X axis tick
YT	Y axis tick
SETUP GROUP	
IP P1x,P1y(,P2x,P2y)	Input P1 (and P2) (integer format −32768 to +32767)
IW xlo,ylo,xhi,yhi	Input window (integer format −32768 to +32767)
OP	Output P1 and P2

*Not available in HP-IL Option 003

Table 2-1. 7470A HP-GL Instruction Set (Continued)

INSTRUCTION	DEFINITION
CONFIGURATION AND STATUS GROUP	
DF	Set default values
IM e(,s(,p))	Input e, s, and p masks
IN	Initialize
OE	Output error
OS	Output status
SC x1,x2,y1,y2	Scale (integer format −32768 to +32767)
DT c	Define label terminator (c = ASCII character)
OA	Output actual position and pen status
OO	Output options
OF	Output factors
OI	Output identification
OW	Output window

```
10 ! PERFORMANCE VERIFICATION
20 !          PLOT
30 !     (MARCH 1,1982)
40 !
50 !
60 ! SELECT ADDRESS FOR PLOTTER INTERFACE
70 !
80 CLEAR
90 DISP "ENTER ADDRESS"
100 DISP
110 DISP "  eg. RS-232-C   '10'"
120 DISP "  eg. HP-IB     '705'"
130 DISP "  eg. HP-IL     '901'"
140 DISP
150 INPUT N
160 DISP "ADDRESS IS";N
170 IF N<99 THEN GOSUB 1070
180 !
190 ! INIT 7470A & OUTPUT P1,P2 & WINDOW COORDINATES
200 !
210 OUTPUT N USING "#,K" ; "IN;OP;"
220 ENTER N ; X1,Y1,X2,Y2
230 OUTPUT N USING "#,K" ; "OW;"
240 ENTER N ; X3,Y3,X4,Y4
250 !
260 ! DRAW + AT P1 & P2 & LABEL COORDINATES
270 !
280 OUTPUT N USING "#,K" ; "SP1;SM+;PA",X1,",",Y1,";"
290 OUTPUT N USING "#,K" ; "CP2,-.3;LBP1=(",VAL$(X1),",",VAL$(Y1),")",CHR$(3)
300 OUTPUT N USING "#,K" ; "PA",X2,",",Y2,";SM;"
310 OUTPUT N USING "#,K" ; "CP-16,-.3;LBP2=(",VAL$(X2),",",VAL$(Y2),")",CHR$(3)
320 !
330 ! DRAW & LABEL AXIS
340 !
350 OUTPUT N USING "#,K" ; "SP2;PA9144,1016;PD;"
360 FOR I=1 TO 8
370 OUTPUT N USING "#,K" ; "XT;PR-1011,0;"
380 NEXT I
390 FOR I=1 TO 15
400 OUTPUT N USING "#,K" ; "PR0,400;YT;"
410 NEXT I
420 OUTPUT N USING "#,K" ; "PU;PA600,3500;DI0,1;LBCentimeters",CHR$(3)
430 OUTPUT N USING "#,K" ; "PA700,6966;DI;"
440 FOR I=15 TO 0 STEP -1
450 IF I<10 THEN OUTPUT N USING "#,K" ; "LB",CHR$(32),CHR$(3)
460 OUTPUT N USING "#,K" ; "LB",VAL$(I),CHR$(13),CHR$(3),";PR0,-400;"
470 NEXT I
480 OUTPUT N USING "#,K" ; "PA1032,756;"
490 FOR I=0 TO 8
500 OUTPUT N USING "#,K" ; "LB",VAL$(I),CHR$(13),CHR$(3),";PR1011,0;"
510 NEXT I
520 OUTPUT N USING "#,K" ; "PA4830,516;LBInches",CHR$(3)
530 !
540 ! DRAW CIRCULAR FAN
550 !
560 OUTPUT N USING "#,K" ; "SP1;PA5080,4064;"
570 DEG
580 FOR I=0 TO 345 STEP 15
590 X5=5080+508*COS(I)
600 Y5=4064+508*SIN(I)
610 OUTPUT N USING "#,K" ; "PA",VAL$(INT(X5)),",",VAL$(INT(Y5)),";PD;"
620 X5=5080+1524*COS(I)
630 Y5=4064+1524*SIN(I)
640 OUTPUT N USING "#,K" ; "PA",VAL$(INT(X5)),",",VAL$(INT(Y5)),";PU;"
650 NEXT I
660 !
```

7470-A-7-1

Figure 2-1. Test Program (Sheet 1 of 2)

```
670 !   PEN TO PEN REPEATABILITY
680 !
690 OUTPUT N USING "#,K" ; "PA2022,4064;VS8;"
700 GOSUB 970
710 OUTPUT N USING "#,K" ; "SP2;PA2022,4064;"
720 GOSUB 1010
730 OUTPUT N USING "#,K" ; "PA8088,4064;"
740 GOSUB 970
750 OUTPUT N USING "#,K" ; "SP1;PA8088,4064;"
760 GOSUB 1010
770 !
780 ! DRAW LABELS
790 !
800 OUTPUT N USING "#,K" ; "SP2;PA3810,6514;"
810 OUTPUT N USING "#,K" ; "VS;SI1,1;SL.45;LB7470A",CHR$(3)
820 OUTPUT N USING "#,K" ; "PA3810,1778;"
830 OUTPUT N USING "#,K" ; "SI;SL;LBPerformance Verification",,CHR$(3)
840 OUTPUT N USING "#,K" ; "CP-14,-1;LBPlot",CHR$(3)
850 !
860 ! FRAME WINDOW
870 !
880 OUTPUT N USING "#,K" ; "PA",X3,",",Y4,";SP1;PD;"
890 OUTPUT N USING "#,K" ; "PA",X3,",",Y3,";"
900 OUTPUT N USING "#,K" ; "PA",X4,",",Y3,";"
910 OUTPUT N USING "#,K" ; "PA",X4,",",Y4,";"
920 OUTPUT N USING "#,K" ; "PA",X3,",",Y4,";PU;SP0;"
930 END
940 !
950 ! REPEATABILITY SUBROUTINES
960 !
970 OUTPUT N USING "#,K" ; "PD;PR4,-4,506,0,0,8,-506,0,0,506,-8,0,0,-506;"
980 OUTPUT N USING "#,K" ; "PR-506,0,0,-8,506,0,0,-506,8,0,0,506;PU;"
990 RETURN
1000 !
1010 OUTPUT N USING "#,K" ; "PD;PR256,0,-256,0,0,256,0,-256;"
1020 OUTPUT N USING "#,K" ; "PR-256,0,256,0,0,-256,0,256;PU;"
1030 RETURN
1040 !
1050 ! HP 85 RS232C INTERFACE SETUP
1060 !
1070 CONTROL 10,1 ; 16
1080 CONTROL 10,2 ; 5
1090 CONTROL 10,3 ; 11
1100 CONTROL 10,4 ; 3
1110 CONTROL 10,5 ; 16
1120 CONTROL 10,16 ; 0
1130 !
1140 ! 7470A-OP001 TURN-ON & CONFIGURATION
1150 !
1160 OUTPUT N USING "#,K" ; "ₜ.(" !            TURN PLOTTER ON
1170 OUTPUT N USING "#,K" ; "ₜ.J" !            ABORT DEVICE CONTROL INSTRUCTION
1180 OUTPUT N USING "#,K" ; "ₜ.K" !            ABORT GRAPHIC INSTRUCTION
1190 OUTPUT N USING "#,K" ; "ₜ.M;;;13;10:" ! TERMINATE OUTPUT WITH Cr & Lf
1200 OUTPUT N USING "#,K" ; "ₜ.@;13:" !        SET HARDWARE HANDSHAKE MODE
1210 OUTPUT N USING "#,K" ; "ₜ.L" !            OUTPUT BUFFER SIZE
1220 ENTER N ; B
1230 DISP "BUFFER SIZE IS";B
1240 RETURN
```

7470-A-8-1

Figure 2-1. Test Program (Sheet 2 of 2)

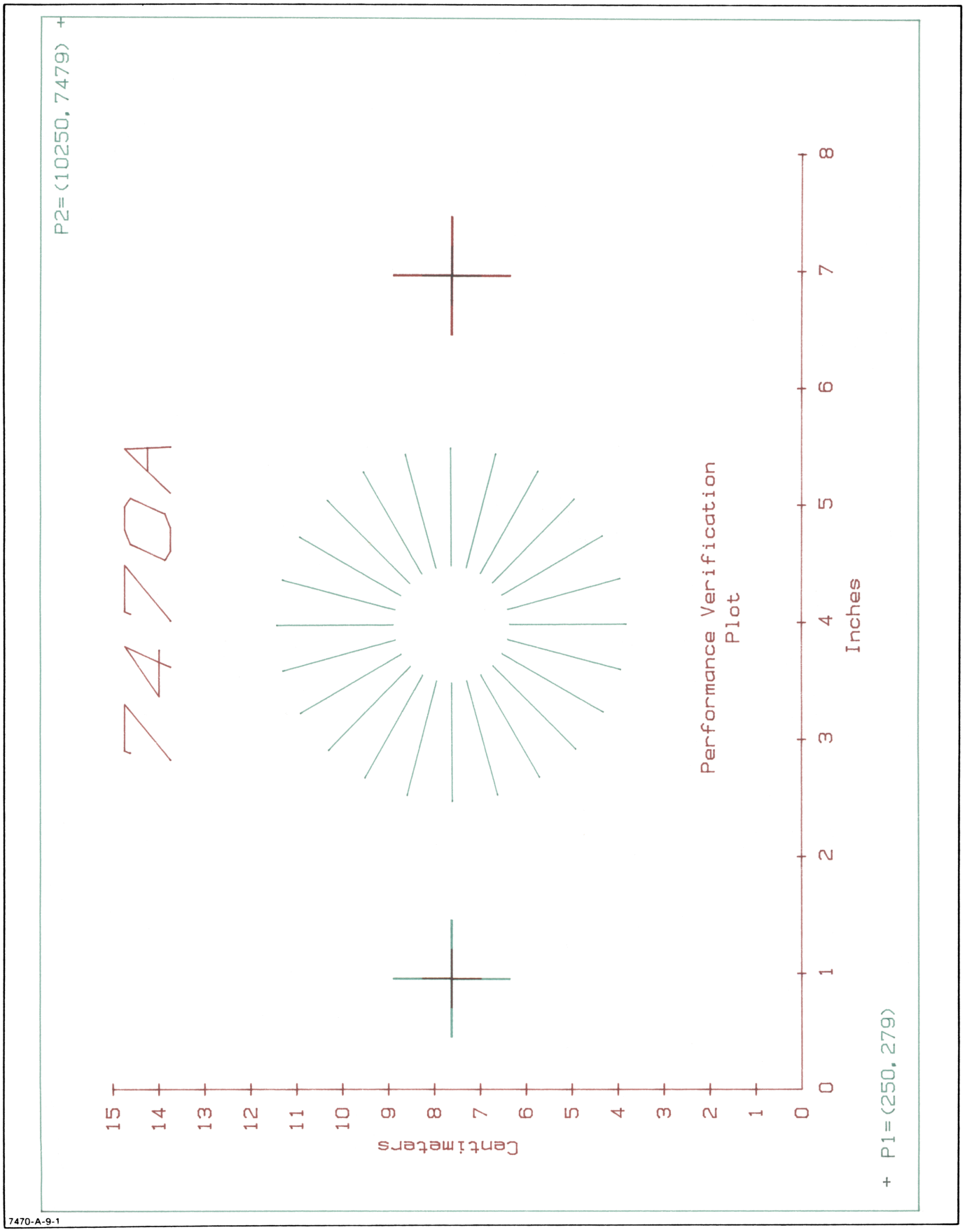

Figure 2-2. Performance Verification Plot

SECTION III

REPLACEABLE PARTS

3-1. INTRODUCTION

3-2. This section contains information for ordering parts for the HP Model 7470A Plotter. Included are lists of electrical and mechanical parts and an illustration of mechanical parts.

3-3. EXCHANGE ASSEMBLIES

3-4. Part numbers for assemblies that are available on an exchange basis are listed in the parts lists below the new assembly number. These factory repaired and tested assemblies are available only on a trade-in basis; therefore, the defective assembly must be returned for credit. For this reason, assemblies required for spare parts stock must be ordered by the new part number.

3-5. REPLACEABLE PARTS LISTS

3-6. Electrical parts for the 7470A are listed in Tables 3-1 through 3-3. Table 3-4 is a list of mechanical parts which are illustrated in Figure 3-1.

Table 3-1 = Option 001 PCA
Table 3-2 = Option 002 PCA
Table 3-3 = Option 003 PCA
Table 3-4 = Mechanical parts

3-7. ORDERING INFORMATION

3-8. To obtain replacement parts or assemblies address an order or inquiry to the nearest Hewlett-Packard Sales and Support Office. Include the HP Part Number, the check digit (listed under the heading "CD" in the parts list), the description, and the quantity required.

3-9. CODE LIST OF MANUFACTURERS

3-10. Table 3-5 lists the five-digit code numbers assigned to the manufacturers of parts in the Model 7470A Plotter. These code numbers appear with the parts in Tables 3-1 through 3-4 as an aid for ordering replacement parts directly from the manufacturer.

3-11. DESIGNATIONS AND ABBREVIATIONS

3-12. Table 3-6 lists designations and abbreviations used throughout this manual. Abbreviations in the parts lists are always capital letters. In other parts of the manual both upper and lower case abbreviations are used.

Table 3-1. Parts List, Main PCA, RS-323-C, Option 001

Reference Designation	HP Part Number	C D	Qty	Description	Mfr Code	Mfr Part Number
A1	07470-60101	6	1	PCA-MAIN, RS-323-C NEW	28480	07470-60101
	07470-66101	8	1	PCA-MAIN, RS-323-C REBUILT	28480	07470-66101
A1C1	0160-3847	9	18	CAPACITOR-FXD .01UF +100-0% 50VDC CER	28480	0160-3847
A1C2	0160-3847	9		CAPACITOR-FXD .01UF +100-0% 50VDC CER	28480	0160-3847
A1C3	0160-3847	9		CAPACITOR-FXD .01UF +100-0% 50VDC CER	28480	0160-3847
A1C4	0180-2887	7	1	CAPACITOR-FXD 2200UF+75-10% 40VDC AL	28480	0180-2887
A1C5	0160-3847	9		CAPACITOR-FXD .01UF +100-0% 50VDC CER	28480	0160-3847
A1C6	0160-3847	9		CAPACITOR-FXD .01UF +100-0% 50VDC CER	28480	0160-3847
A1C7	0160-3847	9		CAPACITOR-FXD .01UF +100-0% 50VDC CER	28480	0160-3847
A1C8	0160-3847	9		CAPACITOR-FXD .01UF +100-0% 50VDC CER	28480	0160-3847
A1C9	0160-3847	9		CAPACITOR-FXD .01UF +100-0% 50VDC CER	28480	0160-3847
A1C10	0160-3847	9		CAPACITOR-FXD .01UF +100-0% 50VDC CER	28480	0160-3847
A1C11	0160-3533	0	5	CAPACITOR-FXD 470PF +-5% 300VDC MICA	28480	0160-3533
A1C12	0160-3533	0		CAPACITOR-FXD 470PF +-5% 300VDC MICA	28480	0160-3533
A1C13	0160-3847	9		CAPACITOR-FXD .01UF +100-0% 50VDC CER	28480	0160-3847
A1C14	0180-2984	5	2	CAPACITOR-FXD 47UF+-20% 50VDC AL	28480	0180-2984
A1C15	0160-3533	0		CAPACITOR-FXD 470PF +-5% 300VDC MICA	28480	0160-3533
A1C16	0160-3847	9		CAPACITOR-FXD .01UF +100-0% 50VDC CER	28480	0160-3847
A1C17	0180-0291	3	2	CAPACITOR-FXD 1UF+-10% 35VDC TA	56289	150D105X9035A2
A1C18	0140-0202	2	1	CAPACITOR-FXD 15PF +-5% 500VDC MICA	72136	DM15C150J0500WV1CR
A1C19	0180-2986	7	3	CAPACITOR-FXD 330UF+-20% 50VDC AL	28480	0180-2986
A1C20	0180-2986	7		CAPACITOR-FXD 330UF+-20% 50VDC AL	28480	0180-2986
A1C21	0180-2986	7		CAPACITOR-FXD 330UF+-20% 50VDC AL	28480	0180-2986
A1C22	0160-2306	3	1	CAPACITOR-FXD 27PF +-5% 300VDC MICA	28480	0160-2306
A1C23	0160-4835	7	1	CAPACITOR-FXD .1UF +-10% 50VDC CER	28480	0160-4835
A1C24	0180-2879	7	2	CAPACITOR-FXD 22UF+50-10% 25VDC AL	28480	0180-2879
A1C25	0160-3533	0		CAPACITOR-FXD 470PF +-5% 300VDC MICA	28480	0160-3533
A1C26	0160-3533	0		CAPACITOR-FXD 470PF +-5% 300VDC MICA	28480	0160-3533
A1C27	0160-3847	9		CAPACITOR-FXD .01UF +100-0% 50VDC CER	28480	0160-3847
A1C28	0180-2879	7		CAPACITOR-FXD 22UF+50-10% 25VDC AL	28480	0180-2879
A1C29	0160-3847	9		CAPACITOR-FXD .01UF +100-0% 50VDC CER	28480	0160-3847
A1C30	0180-3154	3	1	CAPACITOR-FXD 6800UF+-20% 25VDC AL	28480	0180-3154
A1C31	0160-0159	0	3	CAPACITOR-FXD 6800PF +-10% 200VDC POLYE	28480	0160-0159
A1C32	0160-4005	3	1	CAPACITOR-FXD 1UF +-20% 100VDC CER	28480	0160-4005
A1C33	0180-2984	5		CAPACITOR-FXD 47UF+-20% 50VDC AL	28480	0180-2984
A1C34	0160-0159	0		CAPACITOR-FXD 6800PF +-10% 200VDC POLYE	28480	0160-0159
A1C35	0160-3847	9		CAPACITOR-FXD .01UF +100-0% 50VDC CER	28480	0160-3847
A1C36	0160-3847	9		CAPACITOR-FXD .01UF +100-0% 50VDC CER	28480	0160-3847
A1C37	0160-3847	9		CAPACITOR-FXD .01UF +100-0% 50VDC CER	28480	0160-3847
A1C38	0160-3847	9		CAPACITOR-FXD .01UF +100-0% 50VDC CER	28480	0160-3847
A1C39	0160-3847	9		CAPACITOR-FXD .01UF +100-0% 50VDC CER	28480	0160-3847
A1C40	0180-0291	3		CAPACITOR-FXD 1UF+-10% 35VDC TA	56289	150D105X9035A2
A1C41	0160-0159	0		CAPACITOR-FXD 6800PF +-10% 200VDC POLYE	28480	0160-0159
E A1C42	0180-3251	1	1	CAPACITOR-FXD 68UF+100-10% 35VDC AL	28480	0180-3251
A1CR1	1901-1065	2	1	DIODE-PWR RECT 1N4936 400V 1A 200NS	14936	1N4936
A1CR2	T-12130	9	4	DIODE-MBR1045	28480	T-12130
A1CR3	T-12130	9		DIODE-MBR1045	28480	T-12130
A1CR4	T-12130	9		DIODE-MBR1045	28480	T-12130
A1CR5	T-12130	9		DIODE-MBR1045	28480	T-12130
A1CR6	1901-0704	4	6	DIODE-PWR RECT 1N4002 100V 1A DO-41	01295	1N4002
A1CR7	1901-0704	4		DIODE-PWR RECT 1N4002 100V 1A DO-41	01295	1N4002
A1CR8	1901-0704	4		DIODE-PWR RECT 1N4002 100V 1A DO-41	01295	1N4002
A1CR9	1901-0704	4		DIODE-PWR RECT 1N4002 100V 1A DO-41	01295	1N4002
A1CR10	1901-0050	3	1	DIODE-SWITCHING 80V 200MA 2NS DO-35	28480	1901-0050
A1CR11	1901-1081	2	4	DIODE-PWR RECT 100V 3A	04713	MR501
A1CR12	1901-0704	4		DIODE-PWR RECT 1N4002 100V 1A DO-41	01295	1N4002
A1CR13	1901-1081	2		DIODE-PWR RECT 100V 3A	04713	MR501
A1CR14	1901-0704	4		DIODE-PWR RECT 1N4002 100V 1A DO-41	01295	1N4002
A1CR15	1901-1081	2		DIODE-PWR RECT 100V 3A	04713	MR501
A1CR16	1901-1081	2		DIODE-PWR RECT 100V 3A	04713	MR501
A1DS1	1990-0487	7	1	LED-LAMP LUM-INT=1MCD IF=20MA-MAX BVR=5V	28480	5082-4584
A1E1	2110-0597	7	2	FUSEHOLDER-CLIP TYPE 10A 250 V	28480	2110-0597
A1E2	2110-0597	7		FUSEHOLDER-CLIP TYPE 10A 250 V	28480	2110-0597
A1E3	1200-0541	1	1	SOCKET-IC 24-CONT DIP DIP-SLDR	28480	1200-0541
A1E4	1200-0654	7	3	SOCKET-IC 40-CONT DIP DIP-SLDR	28480	1200-0654
A1E5	1200-0654	7		SOCKET-IC 40-CONT DIP DIP-SLDR	28480	1200-0654
A1E6	1200-0654	7		SOCKET-IC 40-CONT DIP DIP-SLDR	28480	1200-0654
A1E8	1200-0567	1	1	SOCKET-IC 28-CONT DIP DIP-SLDR	28480	1200-0567
A1F1	2110-0655	8	1	FUSE-3.15A 250 V	28480	2110-0655
A1F2	2110-0423	8	1	FUSE 1.5A 125 V NTD .281X.093	28480	2110-0423

Table 3-1. Parts List, Main PCA, RS-323-C, Option 001 (Continued)

Reference Designation	HP Part Number	C D	Qty	Description	Mfr Code	Mfr Part Number
A1F3	2110-0577	3	1	FUSE .75A 125V .281X.093	75915	275.750
A1H1	0535-0031	2	6	NUT-HEX W/LKWR M3 X 0.5 2.4MM-THK	00000	ORDER BY DESCRIPTION
A1H2	0535-0031	2		NUT-HEX W/LKWR M3 X 0.5 2.4MM-THK	00000	ORDER BY DESCRIPTION
A1H3	0535-0031	2		NUT-HEX W/LKWR M3 X 0.5 2.4MM-THK	00000	ORDER BY DESCRIPTION
A1H4	0535-0031	2		NUT-HEX W/LKWR M3 X 0.5 2.4MM-THK	00000	ORDER BY DESCRIPTION
A1H5	0535-0031	2		NUT-HEX W/LKWR M3 X 0.5 2.4MM-THK	00000	ORDER BY DESCRIPTION
A1H6	0535-0031	2		NUT-HEX W/LKWR M3 X 0.5 2.4MM-THK	00000	ORDER BY DESCRIPTION
A1H7	0515-0055	8	4	SCREW-MACH M3 X 0.5 6MM-LG PAN-HD	28480	0515-0055
A1H8	0515-0055	8		SCREW-MACH M3 X 0.5 6MM-LG PAN-HD	28480	0515-0055
A1H9	0515-0055	8		SCREW-MACH M3 X 0.5 6MM-LG PAN-HD	28480	0515-0055
A1H10	0515-0055	8		SCREW-MACH M3 X 0.5 6MM-LG PAN-HD	28480	0515-0055
A1J1	1200-0575	1	2	SOCKET-STRP 4-CONT SIP DIP-SLDR	28480	1200-0575
A1J2	1251-3192	1	2	CONNECTOR 3-PIN M POST TYPE	28480	1251-3192
A1J3	1251-4245	7	2	CONNECTOR 2-PIN M POST TYPE	28480	1251-4245
A1J4	1251-4946	5	1	CONNECTOR 25-PIN F D SUBMIN	28480	1251-4946
A1J5	1251-4245	7		CONNECTOR 2-PIN M POST TYPE	28480	1251-4245
A1J6	1200-0575	1		SOCKET-STRP 4-CONT SIP DIP-SLDR	28480	1200-0575
A1J7	1251-3192	1		CONNECTOR 3-PIN M POST TYPE	28480	1251-3192
A1L1	9100-1788	6	1	CHOKE-WIDE BAND ZMAX=680 OHM@ 180 MHZ	02114	VK200 20/48
A1MP1	07470-40038	6	1	SPACER-LED	28480	07470-40038
A1Q1	1854-0921	6	4	TRANSISTOR NPN DARL TO-220AB PD=2W	28480	1854-0921
A1Q2	1854-0921	6		TRANSISTOR NPN DARL TO-220AB PD=2W	28480	1854-0921
A1Q3	1854-0921	6		TRANSISTOR NPN DARL TO-220AB PD=2W	28480	1854-0921
A1Q4	1854-0921	6		TRANSISTOR NPN DARL TO-220AB PD=2W	28480	1854-0921
A1Q5	1853-0509	4	4	TRANSISTOR PNP TO-220AB PD=2W FT=3MHZ	28480	1853-0509
A1Q6	1853-0509	4		TRANSISTOR PNP TO-220AB PD=2W FT=3MHZ	28480	1853-0509
A1Q7	1853-0509	4		TRANSISTOR PNP TO-220AB PD=2W FT=3MHZ	28480	1853-0509
A1Q8	1853-0509	4		TRANSISTOR PNP TO-220AB PD=2W FT=3MHZ	28480	1853-0509
A1Q9	1853-0059	9	1	TRANSISTOR PNP 2N3791 SI TO-3 PD=150W	04713	2N3791
E A1Q10	1854-0932	9	1	TRANSISTOR-NPN TIP 31A	28480	1854-0932
A1R1	0811-3456	7	1	RESISTOR .1 3% 1W PW TC=0+-90	28480	0811-3456
A1R2	0699-0982	8	4	RESISTOR-FXD 1K OHM 5% 2W	28480	0699-0982
A1R3	0699-0982	8		RESISTOR-FXD 1K OHM 5% 2W	28480	0699-0982
A1R4	0699-0982	8		RESISTOR-FXD 1K OHM 5% 2W	28480	0699-0982
A1R5	0699-0982	8		RESISTOR-FXD 1K OHM 5% 2W	28480	0699-0982
A1R6	0757-0288	1	1	RESISTOR 9.09K 1% .125W F TC=0+-100	19701	MF4C1/8-T0-9091-F
A1R7	0698-3444	1	1	RESISTOR 316 1% .125W F TC=0+-100	24546	C4-1/8-T0-316R-F
A1R8	0757-0280	3	3	RESISTOR 1K 1% .125W F TC=0+-100	24546	C4-1/8-T0-1001-F
A1R9	0683-1055	5	1	RESISTOR 1M 5% .25W FC TC=-800/+900	01121	CB1055
A1R10	0757-0280	3		RESISTOR 1K 1% .125W F TC=0+-100	24546	C4-1/8-T0-1001-F
A1R11	0757-0274	5	1	RESISTOR 1.21K 1% .125W F TC=0+-100	24546	C4-1/8-T0-1211-F
A1R12	0699-0975	9	2	RESISTOR-FXD 10 OHM 2%	28480	0699-0975
A1R13	0698-3622	7	1	RESISTOR 120 5% 2W MO TC=0+-200	28480	0698-3622
A1R14	0699-0975	9		RESISTOR-FXD 10 OHM 2%	28480	0699-0975
A1R15	0698-4483	0	1	RESISTOR 18.7K 1% .125W F TC=0+-100	24546	C4-1/8-T0-1872-F
A1R16	0757-0280	3		RESISTOR 1K 1% .125W F TC=0+-100	24546	C4-1/8-T0-1001-F
A1R17	0757-0818	3	1	RESISTOR 825 1% .5W F TC=0+-100	28480	0757-0818
A1R18	0757-0401	0	1	RESISTOR 100 1% .125W F TC=0+-100	24546	C4-1/8-T0-101-F
A1R19	0699-0263	8	1	RESISTOR 26.1 2% .25W F TC=0+-100	28480	0699-0263
A1R20	0698-3435	0	1	RESISTOR 38.3 1% .125W F TC=0+-100	24546	C4-1/8-T0-38R3-F
A1R21	0698-3155	1	1	RESISTOR 4.64K 1% .125W F TC=0+-100	24546	C4-1/8-T0-4641-F
A1RN1	1810-0279	5	3	NETWORK-RES 10-SIP4.7K OHM X 9	01121	210A472
A1RN2	1810-0279	5		NETWORK-RES 10-SIP4.7K OHM X 9	01121	210A472
A1RN3	1810-0279	5		NETWORK-RES 10-SIP4.7K OHM X 9	01121	210A472
A1S1	3101-1856	5	1	SWITCH-RKR DIP-RKR-ASSY 8-1A .05A 30VDC	28480	3101-1856
A1U1	1820-2715	9	3	IC DRVR TTL NAND DUAL 2-INP	01295	SN75447P
A1U2	1820-2753	5	1	IC MISC CMOS	31471	UA-4 MASKED
A1U3	1820-2715	9		IC DRVR TTL NAND DUAL 2-INP	01295	SN75447P
A1U4	1820-2715	9		IC DRVR TTL NAND DUAL 2-INP	01295	SN75447P
A1U5	1826-0412	1	1	IC COMPARATOR PRCN DUAL 8-DIP-P PKG	27014	LM393N
A1U6	1820-2744	4	2	IC-1MC3-0005	28480	1820-2744
A1U7	1820-2744	4		IC-1MC3-0005	28480	1820-2744
A1U8	1820-0509	5	1	IC DRVR DTL LINE DRVR QUAD	04713	MC1488L
A1U9	1820-2754	6	1	IC MISC CMOS	31471	UA-4 MASKED
A1U10	1820-1438	1	2	IC MUXR/DATA-SEL TTL LS 2-TO-1-LINE QUAD	01295	SN74LS257AN
A1U11	1820-1438	1		IC MUXR/DATA-SEL TTL LS 2-TO-1-LINE QUAD	01295	SN74LS257AN
A1U12	1820-0990	8	1	IC RCVR DTL NAND LINE QUAD	01295	SN75189AJ
A1U13	1820-2470	3	1	IC-DIGITAL MC6850P	28480	1820-2470
A1U14	1820-2099	2	1	IC MICPROC NMOS 8-BIT	04713	MC6802P
A1U15	1826-0904	6	1	IC-LM330T-5.0	28480	1826-0904

Table 3-1. Parts List, Main PCA, RS-323-C, Option 001 (Continued)

Reference Designation	HP Part Number	C D	Qty	Description	Mfr Code	Mfr Part Number
A1U16	1818–3004	6	1	ROM-8K X 8	28480	1818–3004
A1U17	1818–3003	5	1	ROM-4K X 8	28480	1818–3003
A1U18	1818-3014	8	1	IC 1K X 8 RAM	28480	1818-3014
A1U19	1820-1216	3	1	IC DCDR TTL LS 3-TO-8 LINE	28480	1820-1216
A1U20	1820-1197	9	1	IC GATE TTL LS NAND	28480	1820-1197
A1VR1	1902-3094	3	1	DIODE-ZNR 5.11V 2% DO-35 PD=.4W	28480	1902-3094
A1VR2	1902-0551	1	2	DIODE-ZNR 6.2V 5% PD=1W IR=10UA	28480	1902-0551
A1VR3	1902-0551	1		DIODE-ZNR 6.2V 5% PD=1W IR=10UA	28480	1902-0551
A1VR4	1902-0952	6	1	DIODE-ZNR 5.6V 5% DO-35 PD=.4W TC=+.046%	28480	1902-0952
A1VR5	1902-3114	8	2	DIODE-ZNR 6.19V 2% DO-35 PD=.4W	28480	1902-3114
A1VR6	1902-3114	8		DIODE-ZNR 6.19V 2% DO-35 PD=.4W	28480	1902-3114
A1W1	8159-0005	0	1	WIRE 22 AWG	28480	8159–0005
A1Y1	0410-1334	6	1	CRYSTAL-4.00 MHZ	28480	0410-1334

Table 3-2. Parts List, Main PCA, HP-IB, Option 002

Reference Designation	HP Part Number	C D	Qty	Description	Mfr Code	Mfr Part Number
A1	07470-60102	7	1	MAIN PCA, HP-IB NEW	28480	07470-60102
	07470-66102	9	1	MAIN PCA, HP-IB REBUILT	28480	07470-66102
E A1C1	0180-3251	1	1	CAPACITOR-FXD 68UF+100-10% 35VDC AL	28480	0180-3251
A1C2	0160-3847	9	11	CAPACITOR-FXD .01UF +100-0% 50VDC CER	28480	0160-3847
A1C3	0160-3847	9		CAPACITOR-FXD .01UF +100-0% 50VDC CER	28480	0160-3847
A1C4	0160-3847	9		CAPACITOR-FXD .01UF +100-0% 50VDC CER	28480	0160-3847
A1C5	0160-3847	9		CAPACITOR-FXD .01UF +100-0% 50VDC CER	28480	0160-3847
A1C6	0180-2887	7	1	CAPACITOR-FXD 2200UF+75-10% 40VDC AL	28480	0180-2887
A1C7	0160-3847	9		CAPACITOR-FXD .01UF +100-0% 50VDC CER	28480	0160-3847
A1C9	0160-3847	9		CAPACITOR-FXD .01UF +100-0% 50VDC CER	28480	0160-3847
A1C10	0180-2984	5	2	CAPACITOR-FXD 47UF+-20% 50VDC AL	28480	0180-2984
A1C11	0160-3847	9		CAPACITOR-FXD .01UF +100-0% 50VDC CER	28480	0160-3847
A1C12	0180-0291	3	2	CAPACITOR-FXD 1UF+-10% 35VDC TA	56289	150D105X9035A2
A1C13	0140-0202	2	1	CAPACITOR-FXD 15PF +-5% 500VDC MICA	72136	DM15C150J0500WV1CR
A1C15	0180-2984	5		CAPACITOR-FXD 47UF+-20% 50VDC AL	28480	0180-2984
A1C16	0160-2306	3	1	CAPACITOR-FXD 27PF +-5% 300VDC MICA	28480	0160-2306
A1C17	0180-0228	6	1	CAPACITOR-FXD 22UF+-10% 15VDC TA	56289	150D226X9015B2
A1C18	0160-3847	9		CAPACITOR-FXD .01UF +100-0% 50VDC CER	28480	0160-3847
A1C19	0180-3154	3	1	CAPACITOR-FXD 6800UF+-20% 25VDC AL	28480	0180-3154
A1C20	0160-3847	9		CAPACITOR-FXD .01UF +100-0% 50VDC CER	28480	0160-3847
A1C21	0180-2879	7	1	CAPACITOR-FXD 22UF+50-10% 25VDC AL	28480	0180-2879
A1C22	0160-0159	0	3	CAPACITOR-FXD 6800PF +-10% 200VDC POLYE	28480	0160-0159
A1C23	0160-4005	3	1	CAPACITOR-FXD 1UF +-20% 100VDC CER	28480	0160-4005
A1C24	0160-0159	0		CAPACITOR-FXD 6800PF +-10% 200VDC POLYE	28480	0160-0159
A1C25	0180-0291	3		CAPACITOR-FXD 1UF+-10% 35VDC TA	56289	150D105X9035A2
A1C26	0160-0159	0		CAPACITOR-FXD 6800PF +-10% 200VDC POLYE	28480	0160-0159
A1C27	0160-3847	9		CAPACITOR-FXD .01UF +100-0% 50VDC CER	28480	0160-3847
A1C28	0160-4835	7	1	CAPACITOR-FXD .1UF +-10% 50VDC CER	28480	0160-4835
A1C29	0160-3847	9		CAPACITOR-FXD .01UF +100-0% 50VDC CER	28480	0160-3847
A1CR1	1901-1065	2	1	DIODE-PWR RECT 1N4936 400V 1A 200NS	14936	1N4936
A1CR2	T-12130	9	4	DIODE-MBR1045	28480	T-12130
A1CR3	T-12130	9		DIODE-MBR1045	28480	T-12130
A1CR4	T-12130	9		DIODE-MBR1045	28480	T-12130
A1CR5	T-12130	9		DIODE-MBR1045	28480	T-12130
A1CR8	1901-1081	2	4	DIODE-PWR RECT 100V 3A	04713	MR501
A1CR10	1901-1081	2		DIODE-PWR RECT 100V 3A	04713	MR501
A1CR12	1901-1081	2		DIODE-PWR RECT 100V 3A	04713	MR501
A1CR13	1901-1081	2		DIODE-PWR RECT 100V 3A	04713	MR501
A1CR14	1901-0050	3	1	DIODE-SWITCHING 80V 200MA 2NS DO-35	28480	1901-0050
A1DS1	1990-0487	7	1	LED-LAMP LUM-INT=1MCD IF=20MA-MAX BVR=5V	28480	5082-4584
A1E1	2110-0597	7	2	FUSEHOLDER-CLIP TYPE 10A 250 V	28480	2110-0597
A1E2	2110-0597	7		FUSEHOLDER-CLIP TYPE 10A 250 V	28480	2110-0597
A1E3	1200-0541	3	1	SOCKET-IC 24-CONT DIP DIP-SLDR	28480	1200-0541
A1E4	1200-0654	7	4	SOCKET-IC 40-CONT DIP DIP-SLDR	28480	1200-0654
A1E5	1200-0654	7		SOCKET-IC 40-CONT DIP DIP-SLDR	28480	1200-0654
A1E6	1200-0654	7		SOCKET-IC 40-CONT DIP DIP-SLDR	28480	1200-0654
A1E7	1200-0654	7		SOCKET-IC 40-CONT DIP DIP-SLDR	28480	1200-0654
A1F1	2110-0655	8	1	FUSE-3.15A 250V	28480	2110-0655
A1F2	2110-0577	3	1	FUSE .75A 125V .281X.093	75915	275.750
A1F3	2110-0423	8	1	FUSE 1.5A 125V NTD .281X.093	28480	2110-0423
A1H1	0515-0055	8	6	SCREW-MACH M3 X 0.5 6MM-LG PAN-HD	28480	0515-0055
A1H2	0515-0055	8		SCREW-MACH M3 X 0.5 6MM-LG PAN-HD	28480	0515-0055
A1H3	0515-0055	8		SCREW-MACH M3 X 0.5 6MM-LG PAN-HD	28480	0515-0055
A1H4	0515-0055	8		SCREW-MACH M3 X 0.5 6MM-LG PAN-HD	28480	0515-0055
A1H5	0515-0055	8		SCREW-MACH M3 X 0.5 6MM-LG PAN-HD	28480	0515-0055
A1H6	0515-0055	8		SCREW-MACH M3 X 0.5 6MM-LG PAN-HD	28480	0515-0055
A1H7	0535-0031	2	6	NUT-HEX W/LKWR M3 X 0.5 2.4MM-THK	00000	ORDER BY DESCRIPTION
A1H8	0535-0031	2		NUT-HEX W/LKWR M3 X 0.5 2.4MM-THK	00000	ORDER BY DESCRIPTION
A1H9	0535-0031	2		NUT-HEX W/LKWR M3 X 0.5 2.4MM-THK	00000	ORDER BY DESCRIPTION
A1H10	0535-0031	2		NUT-HEX W/LKWR M3 X 0.5 2.4MM-THK	00000	ORDER BY DESCRIPTION
A1H11	0535-0031	2		NUT-HEX W/LKWR M3 X 0.5 2.4MM-THK	00000	ORDER BY DESCRIPTION
A1H12	0535-0031	2		NUT-HEX W/LKWR M3 X 0.5 2.4MM-THK	00000	ORDER BY DESCRIPTION
A1J1	1200-0575	1	2	SOCKET-STRP 4-CONT SIP DIP-SLDR	28480	1200-0575
A1J2	1251-3192	1	2	CONNECTOR 3-PIN M POST TYPE	28480	1251-3192
A1J3	1251-4245	7	2	CONNECTOR 2-PIN M POST TYPE	28480	1251-4245
A1J4	1251-4040	0	1	CONNECTOR 24-PIN F MICRO RIBBON	28480	1251-4040
A1J5	1251-4245	7		CONNECTOR 2-PIN M POST TYPE	28480	1251-4245

Table 3-2. Parts List, Main PCA, HP-IB, Option 002 (Continued)

	Reference Designation	HP Part Number	C D	Qty	Description	Mfr Code	Mfr Part Number
	A1J6	1200-0575	1		SOCKET-STRP 4-CONT SIP DIP-SLDR	28480	1200-0575
	A1J7	1251-3192	1		CONNECTOR 3-PIN M POST TYPE	28480	1251-3192
	A1L1	9100-1788	6	1	CHOKE-WIDE BAND ZMAX=680 OHM@ 180 MHZ	02114	VK200 20/48
	A1MP1	07470-40038	6	1	SPACER-LED	28480	07470-40038
	A1Q1	1854-0921	6	4	TRANSISTOR NPN DARL TO-220AB PD=2W	28480	1854-0921
	A1Q2	1854-0921	6		TRANSISTOR NPN DARL TO-220AB PD=2W	28480	1854-0921
	A1Q3	1854-0921	6		TRANSISTOR NPN DARL TO-220AB PD=2W	28480	1854-0921
	A1Q4	1854-0921	6		TRANSISTOR NPN DARL TO-220AB PD=2W	28480	1854-0921
	A1Q5	1853-0509	4	4	TRANSISTOR PNP TO-220AB PD=2W FT=3MHZ	28480	1853-0509
	A1Q6	1853-0509	4		TRANSISTOR PNP TO-220AB PD=2W FT=3MHZ	28480	1853-0509
	A1Q7	1853-0509	4		TRANSISTOR PNP TO-220AB PD=2W FT=3MHZ	28480	1853-0509
	A1Q8	1853-0509	4		TRANSISTOR PNP TO-220AB PD=2W FT=3MHZ	28480	1853-0509
	A1Q9	1853-0059	9	1	TRANSISTOR PNP 2N3791 SI TO-3 PD=150W	04713	2N3791
E	A1Q10	1854-0932	9	1	TRANSISTOR-NPN TIP 31A	28480	1854-0932
	A1R1	0811-3456	7	1	RESISTOR .1 3% 1W PW TC=0+-90	28480	0811-3456
	A1R2	0699-0982	8	4	RESISTOR-FXD 1K OHM 5% 2W	28480	0699-0982
	A1R3	0699-0982	8		RESISTOR-FXD 1K OHM 5% 2W	28480	0699-0982
	A1R4	0699-0982	8		RESISTOR-FXD 1K OHM 5% 2W	28480	0699-0982
	A1R5	0699-0982	8		RESISTOR-FXD 1K OHM 5% 2W	28480	0699-0982
	A1R6	0757-0288	1	1	RESISTOR 9.09K 1% .125W F TC=0+-100	19701	MF4C1/8-T0-9091-F
	A1R7	0698-3444	1	1	RESISTOR 316 1% .125W F TC=0+-100	24546	C4-1/8-T0-316R-F
	A1R8	0757-0280	3	3	RESISTOR 1K 1% .125W F TC=0+-100	24546	C4-1/8-T0-1001-F
	A1R9	0683-1055	5	1	RESISTOR 1M 5% .25W FC TC=-800/+900	01121	CB1055
	A1R10	0757-0280	3		RESISTOR 1K 1% .125W F TC=0+-100	24546	C4-1/8-T0-1001-F
	A1R11	0698-0085	0	1	RESISTOR 2.61K 1% .125W F TC=0+-100	24546	C4-1/8-T0-2611-F
	A1R12	0757-0280	3		RESISTOR 1K 1% .125W F TC=0+-100	24546	C4-1/8-T0-1001-F
	A1R13	0757-0818	3	1	RESISTOR 825 1% .5W F TC=0+-100	28480	0757-0818
	A1R14	0757-0401	0	1	RESISTOR 100 1% .125W F TC=0+-100	24546	C4-1/8-T0-101-F
	A1R15	0698-3435	0	1	RESISTOR 38.3 1% .125W F TC=0+-100	24546	C4-1/8-T0-38R3-F
	A1R16	0698-4483	0	1	RESISTOR 18.7K 1% .125W F TC=0+-100	24546	C4-1/8-T0-1872-F
	A1R17	0699-0263	8	2	RESISTOR 26.1 2% .25W F TC=0+-100	28480	0699-0263
	A1R18	0699-0263	8		RESISTOR 26.1 2% .25W F TC=0+-100	28480	0699-0263
	A1RN1	1810-0279	5	3	NETWORK-RES 10-SIP4.7K OHM X 9	01121	210A472
	A1RN2	1810-0279	5		NETWORK-RES 10-SIP4.7K OHM X 9	01121	210A472
	A1RN3	1810-0279	5		NETWORK-RES 10-SIP4.7K OHM X 9	01121	210A472
	A1S1	3101-1973	9	1	SWITCH-RKR DIP-RKR-ASSY 7-1A .05A 30VDC	28480	3101-1973
	A1U1	1820-2715	9	3	IC DRVR TTL NAND DUAL 2-INP	01295	SN75447P
	A1U2	1820-2715	9		IC DRVR TTL NAND DUAL 2-INP	01295	SN75447P
	A1U3	1820-2715	9		IC DRVR TTL NAND DUAL 2-INP	01295	SN75447P
	A1U4	1826-0412	1	1	IC COMPARATOR PRCN DUAL 8-DIP-P PKG	27014	LM393N
	A1U5	1820-2744	4	2	IC-1MC3-0005	28480	1820-2744
	A1U6	1820-2744	4		IC-1MC3-0005	28480	1820-2744
	A1U7	1820-2753	5	1	IC MISC CMOS	31471	UA-4 MASKED
	A1U8	1820-2424	7	2	IC MISC TTL OCTL	04713	MC3447P
	A1U9	1820-2754	6	1	IC MISC CMOS	31471	UA-4 MASKED
	A1U10	1820-1438	1	1	IC MUXR/DATA-SEL TTL LS 2-TO-1-LINE QUAD	01295	SN74LS257AN
	A1U11	1820-2424	7		IC MISC TTL OCTL	04713	MC3447P
	A1U12	1820-2219	8	1	IC MICPROC-ACCESS NMOS 8-BIT	04713	MC68488P
	A1U13	1820-2099	2	1	IC MICPROC NMOS 8-BIT	04713	MC6802P
	A1U14	1826-0904	6	1	IC-LM330T-5.0	28480	1826-0904
	A1U15	1818-1335	2	1	IC NMOS 2048 (2K) STAT RAM 500-NS	08863	35392CP
E	A1U16	1818-1965	4	1	ROM- 8K X 8	28480	1818-1965
	A1VR1	1902-3094	3	1	DIODE-ZNR 5.11V 2% DO-35 PD=.4W	28480	1902-3094
	A1VR2	1902-3114	8	2	DIODE-ZNR 6.19V 2% DO-35 PD=.4W	28480	1902-3114
	A1VR3	1902-3114	8		DIODE-ZNR 6.19V 2% DO-35 PD=.4W	28480	1902-3114
	A1VR4	1902-0952	6	1	DIODE-ZNR 5.6V 5% DO-35 PD=.4W TC=+.046%	28480	1902-0952
	A1Y1	0410-1334	6	1	CRYSTAL-4.00 MHZ	28480	0410-1334

Table 3-3. Parts List, Main PCA, HP-IL, Option 003

Reference Designation	HP Part Number	C D	Qty	Description	Mfr Code	Mfr Part Number
	07470-60103	8	1	MAIN PCA, HP-IL, NEW	28480	07470-60103
	07470-66103	0	1	MAIN PCA, HP-IL, REBUILT	28480	07470-66103
A1C1	0180-3251	1	1	CAPACITOR-FXD 68UF 35VDC	28480	0180-3251
A1C2	0160-3847	9	13	CAPACITOR-FXD .01UF +100-0% 50VDC CER	28480	0160-3847
A1C3	0160-3847	9		CAPACITOR-FXD .01UF +100-0% 50VDC CER	28480	0160-3847
A1C4	0160-3847	9		CAPACITOR-FXD .01UF +100-0% 50VDC CER	28480	0160-3847
A1C5	0160-4812	0	2	CAPACITOR-FXD 220PF +-5% 100VDC CER	28480	0160-4812
A1C6	0180-2887	7	1	CAPACITOR-FXD 2200UF+75-10% 40VDC AL	28480	0180-2887
A1C7	0160-3847	9		CAPACITOR-FXD .01UF +100-0% 50VDC CER	28480	0160-3847
A1C8	0160-3847	9		CAPACITOR-FXD .01UF +100-0% 50VDC CER	28480	0160-3847
A1C9	0160-3847	9		CAPACITOR-FXD .01UF +100-0% 50VDC CER	28480	0160-3847
A1C10	0180-2984	5	2	CAPACITOR-FXD 47UF+-20% 50VDC AL	28480	0180-2984
A1C11	0160-3847	9		CAPACITOR-FXD .01UF +100-0% 50VDC CER	28480	0160-3847
A1C12	0180-0291	3	2	CAPACITOR-FXD 1UF+-10% 35VDC TA	56289	150D105X9035A2
A1C13	0140-0202	2	1	CAPACITOR-FXD 15PF +-5% 500VDC MICA	72136	DM15C150J0500WV1CR
A1C14	0160-4812	0		CAPACITOR-FXD 220PF +-5% 100VDC CER	28480	0160-4812
A1C15	0180-2984	5		CAPACITOR-FXD 47UF+-20% 50VDC AL	28480	0180-2984
A1C16	0160-2306	3	1	CAPACITOR-FXD 27PF +-5% 300VDC MICA	28480	0160-2306
A1C17	0180-0228	6	1	CAPACITOR-FXD 22UF+-10% 15VDC TA	56289	150D226X9015B2
A1C18	0160-3847	9		CAPACITOR-FXD .01UF +100-0% 50VDC CER	28480	0160-3847
A1C19	0180-3154	3	1	CAPACITOR-FXD 6800UF+-20% 25VDC AL	28480	0180-3154
A1C20	0160-3847	9		CAPACITOR-FXD .01UF +100-0% 50VDC CER	28480	0160-3847
A1C21	0180-2879	7	1	CAPACITOR-FXD 22UF+50-10% 25VDC AL	28480	0180-2879
A1C22	0160-0159	0	3	CAPACITOR-FXD 6800PF +-10% 200VDC POLYE	28480	0160-0159
A1C23	0160-4005	3	1	CAPACITOR-FXD 1UF +-20% 100VDC CER	28480	0160-4005
A1C24	0160-0159	0		CAPACITOR-FXD 6800PF +-10% 200VDC POLYE	28480	0160-0159
A1C25	0180-0291	3		CAPACITOR-FXD 1UF+-10% 35VDC TA	56289	150D105X9035A2
A1C26	0160-0159	0		CAPACITOR-FXD 6800PF +-10% 200VDC POLYE	28480	0160-0159
A1C27	0160-3847	9		CAPACITOR-FXD .01UF +100-0% 50VDC CER	28480	0160-3847
A1C28	0160-4835	7	1	CAPACITOR-FXD .1UF +-10% 50VDC CER	28480	0160-4835
A1C29	0160-3847	9		CAPACITOR-FXD .01UF +100-0% 50VDC CER	28480	0160-3847
A1C30	0160-2205	1	1	CAPACITOR-FXD 120PF +-5% 300VDC MICA	28480	0160-2205
A1C31	0160-3847	9		CAPACITOR-FXD .01UF +100-0% 50VDC CER	28480	0160-3847
A1C32	0160-3847	9		CAPACITOR-FXD .01UF +100-0% 50VDC CER	28480	0160-3847
A1CR1	1901-1065	2	1	DIODE-PWR RECT 1N4936 400V 1A 200NS	14936	1N4936
A1CR2	1901-0944	4	4	DIODE-PWR RECT 45V 10A	28480	1901-0944
A1CR3	1901-0944	4		DIODE-PWR RECT 45V 10A	28480	1901-0944
A1CR4	1901-0944	4		DIODE-PWR RECT 45V 10A	28480	1901-0944
A1CR5	1901-0944	4		DIODE-PWR RECT 45V 10A	28480	1901-0944
A1CR6	1901-0704	4	4	DIODE-PWR RECT 1N4002 100V 1A DO-41	01295	1N4002
A1CR7	1901-0704	4		DIODE-PWR RECT 1N4002 100V 1A DO-41	01295	1N4002
A1CR8	1901-1081	2	4	DIODE-PWR RECT 100V 3A	04713	MR501
A1CR9	1901-0704	4		DIODE-PWR RECT 1N4002 100V 1A DO-41	01295	1N4002
A1CR10	1901-1081	2		DIODE-PWR RECT 100V 3A	04713	MR501
A1CR11	1901-0704	4		DIODE-PWR RECT 1N4002 100V 1A DO-41	01295	1N4002
A1CR12	1901-1081	2		DIODE-PWR RECT 100V 3A	04713	MR501
A1CR13	1901-1081	2		DIODE-PWR RECT 100V 3A	04713	MR501
A1CR14	1901-0050	3	1	DIODE-SWITCHING 80V 200MA 2NS DO-35	28480	1901-0050
A1DS1	1990-0487	7	1	LED-LAMP LUM-INT=1MCD IF=20MA-MAX BVR=5V	28480	5082-4584
A1E3	1200-0567	1	2	SOCKET-IC 28-CONT DIP DIP-SLDR	28480	1200-0567
A1E4	1200-0654	7	3	SOCKET-IC 40-CONT DIP DIP-SLDR	28480	1200-0654
A1E5	1200-0654	7		SOCKET-IC 40-CONT DIP DIP-SLDR	28480	1200-0654
A1E6	07470-40051	3	1	ADAPTOR (HP-IL)	28480	07470-40051
A1E7	1200-0654	7		SOCKET-IC 40-CONT DIP DIP-SLDR	28480	1200-0654
A1E8	1205-0463	6	1	HEAT SINK	28480	1205-0463
A1E9	1205-0472	7	1	HEAT SINK- 6254	28480	1205-0472
A1E10	2110-0597	7	2	FUSEHOLDER-CLIP TYPE 10A 250 V	28480	2110-0597
A1E11	2110-0597	7		FUSEHOLDER-CLIP TYPE 10A 250 V	28480	2110-0597
A1E13	07470-40038	6	1	SPACER-L.E.D.	28480	07470-40038
A1E14	1200-0567	1		SOCKET-IC 28-CONT DIP DIP-SLDR	28480	1200-0567
A1E15	1200-0541	1	1	SOCKET-IC 24-CONT DIP DIP-SLDR	28480	1200-0541
A1F1	2110-0655	8	1	FUSE-3.15A 250V	28480	2110-0655
A1F2	2110-0577	3	1	FUSE .75A 125V .281X.093	75915	275.750
A1F3	2110-0423	8	1	FUSE 1.5A 125V NTD .281X.093	28480	2110-0423
A1H1	0515-0055	8	4	SCREW-MACH M3 X 0.5 6MM-LG PAN-HD	28480	0515-0055
A1H2	0515-0055	8		SCREW-MACH M3 X 0.5 6MM-LG PAN-HD	28480	0515-0055
A1H3	0515-0055	8		SCREW-MACH M3 X 0.5 6MM-LG PAN-HD	28480	0515-0055
A1H4	0515-0055	8		SCREW-MACH M3 X 0.5 6MM-LG PAN-HD	28480	0515-0055
A1H5	0535-0031	2	6	NUT-HEX W/LKWR M3 X 0.5 2.4MM-THK	00000	ORDER BY DESCRIPTION

Table 3-3. Parts List, Main PCA, HP-IL, Option 003 (Continued)

Reference Designation	HP Part Number	C D	Qty	Description	Mfr Code	Mfr Part Number
A1H6	0535-0031	2		NUT-HEX W/LKWR M3 X 0.5 2.4MM-THK	00000	ORDER BY DESCRIPTION
A1H7	0535-0031	2		NUT-HEX W/LKWR M3 X 0.5 2.4MM-THK	00000	ORDER BY DESCRIPTION
A1H8	0535-0031	2		NUT-HEX W/LKWR M3 X 0.5 2.4MM-THK	00000	ORDER BY DESCRIPTION
A1H9	0535-0031	2		NUT-HEX W/LKWR M3 X 0.5 2.4MM-THK	00000	ORDER BY DESCRIPTION
A1H10	0535-0031	2		NUT-HEX W/LKWR M3 X 0.5 2.4MM-THK	00000	ORDER BY DESCRIPTION
A1H11	0515-0785	1	2	SCREW-16MM HEX	28480	0515-0785
A1H12	0515-0785	1		SCREW-16MM HEX	28480	0515-0785
A1H13	07470-20016	8	2	STANDOFF (HP-IL)	28480	07470-20016
A1H14	07470-20016	8		STANDOFF (HP-IL)	28480	07470-20016
A1J1	1200-0575	1	2	SOCKET-STRP 4-CONT SIP DIP-SLDR	28480	1200-0575
A1J2	1251-3192	1	2	CONNECTOR 3-PIN M POST TYPE	28480	1251-3192
A1J3	1251-4245	7	2	CONNECTOR 2-PIN M POST TYPE	28480	1251-4245
A1J4	0950-0853	6	1	CONNECTOR,4-FEMALE (HP-IL)	28480	0950-0853
A1J5	1251-4245	7		CONNECTOR 2-PIN M POST TYPE	28480	1251-4245
A1J6	1200-0575	1		SOCKET-STRP 4-CONT SIP DIP-SLDR	28480	1200-0575
A1J7	1251-3192	1		CONNECTOR 3-PIN M POST TYPE	28480	1251-3192
A1L1	9100-1788	6	1	CHOKE-WIDE BAND ZMAX=680 OHM@ 180 MHZ	02114	VK200 20/48
A1L2	9100-1631	8	1	INDUCTOR RF-CH-MLD 56UH 5% .166DX.385LG	28480	9100-1631
A1Q1	1854-0921	6	4	TRANSISTOR NPN DARL TO-220AB PD=2W	28480	1854-0921
A1Q2	1854-0921	6		TRANSISTOR NPN DARL TO-220AB PD=2W	28480	1854-0921
A1Q3	1854-0921	6		TRANSISTOR NPN DARL TO-220AB PD=2W	28480	1854-0921
A1Q4	1854-0921	6		TRANSISTOR NPN DARL TO-220AB PD=2W	28480	1854-0921
A1Q5	1853-0509	4	4	TRANSISTOR PNP TO-220AB PD=2W FT=3MHZ	28480	1853-0509
A1Q6	1853-0509	4		TRANSISTOR PNP TO-220AB PD=2W FT=3MHZ	28480	1853-0509
A1Q7	1853-0509	4		TRANSISTOR PNP TO-220AB PD=2W FT=3MHZ	28480	1853-0509
A1Q8	1853-0509	4		TRANSISTOR PNP TO-220AB PD=2W FT=3MHZ	28480	1853-0509
A1Q9	1853-0059	9	1	TRANSISTOR PNP 2N3791 SI TO-3 PD=150W	04713	2N3791
A1Q10	1854-0932	9	1	TRANSISTOR-NPN TIP 31A	28480	1854-0932
A1R1	0811-3456	7	1	RESISTOR .1 3% 1W PW TC=0+-90	28480	0811-3456
A1R2	0699-0982	8	4	RESISTOR-FXD 1K OHM 5% 2W	28480	0699-0982
A1R3	0699-0982	8		RESISTOR-FXD 1K OHM 5% 2W	28480	0699-0982
A1R4	0699-0982	8		RESISTOR-FXD 1K OHM 5% 2W	28480	0699-0982
A1R5	0699-0982	8		RESISTOR-FXD 1K OHM 5% 2W	28480	0699-0982
A1R6	0757-0288	1	1	RESISTOR 9.09K 1% .125W F TC=0+-100	19701	MF4C1/8-T0-9091-F
A1R7	0698-3444	1	1	RESISTOR 316 1% .125W F TC=0+-100	24546	C4-1/8-T0-316R-F
A1R8	0757-0280	3	3	RESISTOR 1K 1% .125W F TC=0+-100	24546	C4-1/8-T0-1001-F
A1R9	0683-1055	5	1	RESISTOR 1M 5% .25W FC TC=-800/+900	01121	CB1055
A1R10	0757-0280	3		RESISTOR 1K 1% .125W F TC=0+-100	24546	C4-1/8-T0-1001-F
A1R11	0698-0085	0	1	RESISTOR 2.61K 1% .125W F TC=0+-100	24546	C4-1/8-T0-2611-F
A1R12	0757-0280	3		RESISTOR 1K 1% .125W F TC=0+-100	24546	C4-1/8-T0-1001-F
A1R13	0757-0818	3	1	RESISTOR 825 1% .5W F TC=0+-100	28480	0757-0818
A1R14	0757-0401	0	1	RESISTOR 100 1% .125W F TC=0+-100	24546	C4-1/8-T0-101-F
A1R15	0698-3435	0	1	RESISTOR 38.3 1% .125W F TC=0+-100	24546	C4-1/8-T0-38R3-F
A1R16	0698-4483	0	1	RESISTOR 18.7K 1% .125W F TC=0+-100	24546	C4-1/8-T0-1872-F
A1R17	0699-0263	8	2	RESISTOR 26.1 2% .25W F TC=0+-100	28480	0699-0263
A1R18	0699-0263	8		RESISTOR 26.1 2% .25W F TC=0+-100	28480	0699-0263
A1R19	0698-3155	1	3	RESISTOR 4.64K 1% .125W F TC=0+-100	24546	C4-1/8-T0-4641-F
A1R20	0698-3155	1		RESISTOR 4.64K 1% .125W F TC=0+-100	24546	C4-1/8-T0-4641-F
A1R21	0683-3305	2	2	RESISTOR 33 5% .25W FC TC=-400/+500	01121	CB3305
A1R22	0698-3155	1		RESISTOR 4.64K 1% .125W F TC=0+-100	24546	C4-1/8-T0-4641-F
A1R23	0683-3305	2		RESISTOR 33 5% .25W FC TC=-400/+500	01121	CB3305
A1R24	0698-3156	2	2	RESISTOR 14.7K 1% .125W F TC=0+-100	24546	C4-1/8-T0-1472-F
A1R25	0698-3156	2		RESISTOR 14.7K 1% .125W F TC=0+-100	24546	C4-1/8-T0-1472-F
A1R26	0698-3445	2	2	RESISTOR 348 1% .125W F TC=0+-100	24546	C4-1/8-T0-348R-F
A1R27	0698-3445	2		RESISTOR 348 1% .125W F TC=0+-100	24546	C4-1/8-T0-348R-F
A1RN1	1810-0279	5	2	NETWORK-RES 10-SIP4.7K OHM X 9	01121	210A472
A1RN2	1810-0279	5		NETWORK-RES 10-SIP4.7K OHM X 9	01121	210A472
A1S1	3101-0408	1	1	SWITCH-SL DPST DIP-SLIDE-ASSY .1A 50VDC	28480	3101-0408
A1T1	9100-4226	3	1	TRANSFORMER	28480	9100-4226
A1U1	1820-2715	9	3	IC DRVR TTL NAND DUAL 2-INP	01295	SN75447P
A1U2	1820-2715	9		IC DRVR TTL NAND DUAL 2-INP	01295	SN75447P
A1U3	1820-2715	9		IC DRVR TTL NAND DUAL 2-INP	01295	SN75447P
A1U4	1826-0412	1	1	IC COMPARATOR PRCN DUAL 8-DIP-P PKG	27014	LM393N
A1U5	1820-2744	4	2	IC-1MC3-0005	28480	1820-2744
A1U6	1820-2744	4		IC-1MC3-0005	28480	1820-2744
A1U7	1820-2753	5	1	IC MISC CMOS	31471	UA-4 MASKED
A1U8	1820-2927	5	1	IC-1LB3-0003	28480	1820-2927
A1U9	1820-2754	6	1	IC MISC CMOS	31471	UA-4 MASKED
A1U10	1820-1199	1	1	IC INV TTL LS HEX 1-INP	01295	SN74LS04N
A1U13	1820-2099	2	1	IC MICPROC NMOS 8-BIT	04713	MC6802P
A1U14	1826-0904	6	1	IC-LM330T-5.0	28480	1826-0904
A1U15	1818-3014	8	1	IC-SRAM MK4801	28480	1818-3014
A1U16	1818-3051	3	1	ROM- 8K X 8	28480	1818-3051
A1U17	1820-1197	9	1	IC GATE TTL LS NAND QUAD 2-INP	01295	SN74LS00N

Table 3-3. Parts List, Main PCA, HP-IL, Option 003 (Continued)

Reference Designation	HP Part Number	C D	Qty	Description	Mfr Code	Mfr Part Number
A1U18	1818-3060	4	1	ROM- 4K X 8	28480	1818-3060
A1U19	1820-1216	3	1	IC DCDR TTL LS 3-TO-8-LINE 3-INP	01295	SN74LS138N
A1VR1	1902-3094	3	1	DIODE-ZNR 5.11V 2% DO-35 PD=.4W	28480	1902-3094
A1VR2	1902-3114	8	2	DIODE-ZNR 6.19V 2% DO-35 PD=.4W	28480	1902-3114
A1VR3	1902-3114	8		DIODE-ZNR 6.19V 2% DO-35 PD=.4W	28480	1902-3114
A1VR4	1902-0952	6	1	DIODE-ZNR 5.6V 5% DO-35 PD=.4W TC=+.046%	28480	1902-0952
A1VR5	1902-0970	8	4	DIODE-ZNR 33V 5% DO-35 PD=.4W TC=+.097%	28480	1902-0970
A1VR6	1902-0970	8		DIODE-ZNR 33V 5% DO-35 PD=.4W TC=+.097%	28480	1902-0970
A1VR7	1902-0970	8		DIODE-ZNR 33V 5% DO-35 PD=.4W TC=+.097%	28480	1902-0970
A1VR8	1902-0970	8		DIODE-ZNR 33V 5% DO-35 PD=.4W TC=+.097%	28480	1902-0970
A1W1	8159-0005	0	1	RESISTOR-ZERO OHMS 22 AWG LEAD DIA	28480	8159-0005
A1Y1	0410-1334	6	1	CRYSTAL- 4.00 MHZ	28480	0410-1334

Table 3-4. Parts List, Replaceable Mechanical Parts

	Reference Designation	HP Part Number	C D	Qty	Description	Mfr Code	Mfr Part Number
	1	4040-1986	3	1	TOP CASE	28480	4040-1986
	2	4040-2002	6	1	WINDOW	28480	4040-2002
	3	0515-0771	5	2	SCREW-MACHINE ASSEMPLY M4 X 0.7 12MM-LG	00000	ORDER BY DESCRIPTION
	4	0515-0070	7	1	SCREW-MACH M4 X 0.7 6MM-LG PAN-HD	28480	0515-0070
	5	7121-2501	5	1	PANEL-FRONT	28480	7121-2501
	6	1460-1932	6	1	SPRING-PENHOLDER	28480	1460-1932
	7	07470-40012	6	1	ARM-LEFT PENHOLDER	28480	07470-40012
	8	07470-40011	5	1	ARM-RIGHT PENHOLDER	28480	07470-40011
	9	07470-40018	2	1	PENHOLDER	28480	07470-40018
	10	1460-1937	1	1	SPRING	28480	1460-1937
	11	1460-1950	8	1	SPRING	28480	1460-1950
	12	4320-0371	2	1	DAMPER	28480	4320-0371
	13	07470-40015	9	1	PEN CARRIAGE	28480	07470-40015
	14	07470-60005	9	1	IDLER PULLEY	28480	07470-60005
	15	1500-0622	5	1	BELT	28480	1500-0622
	16	7200-1686	3	1	PEN LIFT BAR	28480	7200-1686
	17	1531-0219	1	1	ROD-SLIDER	28480	1531-0219
	18	1460-1931	5	2	SPRING-PEN STABLE	28480	1460-1931
	19	07470-40010	4	1	PEN STABLE-LEFT	28480	07470-40010
	20	0624-0547	4	4	SCREW-TPG 3-24 .5-IN-LG PAN-HD-PHL STL	00000	ORDER BY DESCRIPTION
	21	07470-40006	8	1	PAWL-PEN STABLE	28480	07470-40006
	22	07470-40008	0	1	CAPPER-LEFT	28480	07470-40008
	23	07470-40027	3	1	BELT-TENSIONER	28480	07470-40027
	24	1460-1940	6	1	SPRING	28480	1460-1940
	25	7101-0643	0	1	CHASSIS	28480	7101-0643
	26	0515-0296	9	4	SCREW-MACH M4 X 0.7 35MM-LG PAN-HD	28480	0515-0296
	27	07470-40049	9	2	MOTOR CLAMP	28480	07470-40049
	28	07470-60180	1	1	PEN DRIVE MOTOR ASSY	28480	07470-60180
	29	07470-40016	0	1	END CAP-PEN LIFT BAR	28480	07470-40016
	30	07470-40007	9	1	CAPPER-RIGHT	28480	07470-40007
	31	07470-40009	1	1	PEN STABLE-RIGHT	28480	07470-40009
	32	07470-60010	6	1	SOLENOID ASSEMBLY	28480	07470-60010
	33	0515-0733	9	1	SCREW	28480	0515-0733
	34	07470-60175	4	1	PAPER DRIVE MOTOR ASSY	28480	07470-60175
	35	07470-40004	6	1	COUPLER-RING	28480	07470-40004
	36	07470-40005	7	1	COUPLER-DRIVE SHAFT	28480	07470-40005
	37	07470-60150	5	1	DRIVE SHAFT ASSY	28480	07470-60150
	38	07470-40048	8	2	CLAMP-BEARING	28480	07470-40048
	39	07470-40023	9	1	ARM-PINCH ROLLER (LEFT)	28480	07470-40023
E	40	07470-40052	4	2	PINCH ROLLER	28480	07470-40052
	41	0510-0015	0	2	RETAINER-RING E-R EXT .125-IN-DIA STL	28480	0510-0015
E	42	07470-40022	8	1	ARM-PINCH ROLLER (RIGHT)	28480	07470-40022
	43	1460-1933	7	2	SPRING	84830	LE-022B-5 SS
	44	07470-40024	0	1	HANDLE-PINCH ROLLER	28480	07470-40024
	45	2110-0565	9	1	CAP-FUSEHOLDER (U.S.)	28480	2110-0565
		2110-0567	1	1	CAP-FUSEHOLDER (METRIC)	28480	2110-0567
E	46	2110-0016	5	1	FUSE .6A 250V TD 1.25X.25 UL	75915	313.600
		2110-0639	8	1	FUSE .315A 250V IEC	28480	2110-0639
		2110-0044	9	1	FUSE .3A 250V TD 1.25X.25 UL	75915	313.300
	47	07470-40039	7	1	LINE VOLTAGE LABEL BLOCK	28480	07470-40039
	48	07470-60120	9	1	POWER MODULE ASSY	28480	07470-60120
	48	1251-4470	0	1	CONNECTOR	28480	1251-4470
		2110-0610	5	1	FUSEHOLDER-EXTR POST 16A 250 V	28480	2110-0610
		2110-0569	3	1	FUSEHOLDER COMPONENT NUT; THREAD M12.7	28480	2110-0569
		3103-2443	2	1	SWITCH	28480	3103-2443
	49	9100-4238	7	1	TRANSFORMER-POWER	28480	9100-4238
	50	0515-0611	2	1	SCREW-MACHINE ASSEMPLY M4 X 0.7 18MM-LG	00000	ORDER BY DESCRIPTION
	51	07470-60025	3	1	BASE ASSEMBLY	28480	07470-60025
	52	07470-60101	6	1	PCA-MAIN RS-232-C (OPTION 001)	28480	07470-60101
		07470-66101	8	1	PCA-MAIN (OPTION 001)REBUILT	28480	07470-66101
		07470-60102	7	1	PCA-MAIN HP-IB (OPTION 002)	28480	07470-60102
		07470-66102	9	1	PCA-MAIN, (OPTION 002) REBUILT	28480	07470-66102
		07470-60103	8	1	PCA-MAIN, HP-IL (OPTION 002)	28480	07470-60103
		07470-66103	0	1	PCA-MAIN, (OPTION 003) REBUILT	28480	07470-66103
	53	1251-1198	3	1	HARDWARE PACKAGE (RS-232-C)	28480	1251-1198
		0380-0644	4	2	STANDOFF-METRIC (HP-IB)	00000	ORDER BY DESCRIPTION
	54	1460-0615		1	SPRING-SOLENOID	28480	1460-0615
	55	0515-0085	4	1	SCREW-METRIC M4 X 0.7 10MM LG	28480	0515-0085
	56	07470-20012	4	1	STANDOFF	28480	07470-20012
E	57 (NOT SHOWN)	0340-1020	8	1	INSULATOR (UNDER PCA)	28480	0340-1020

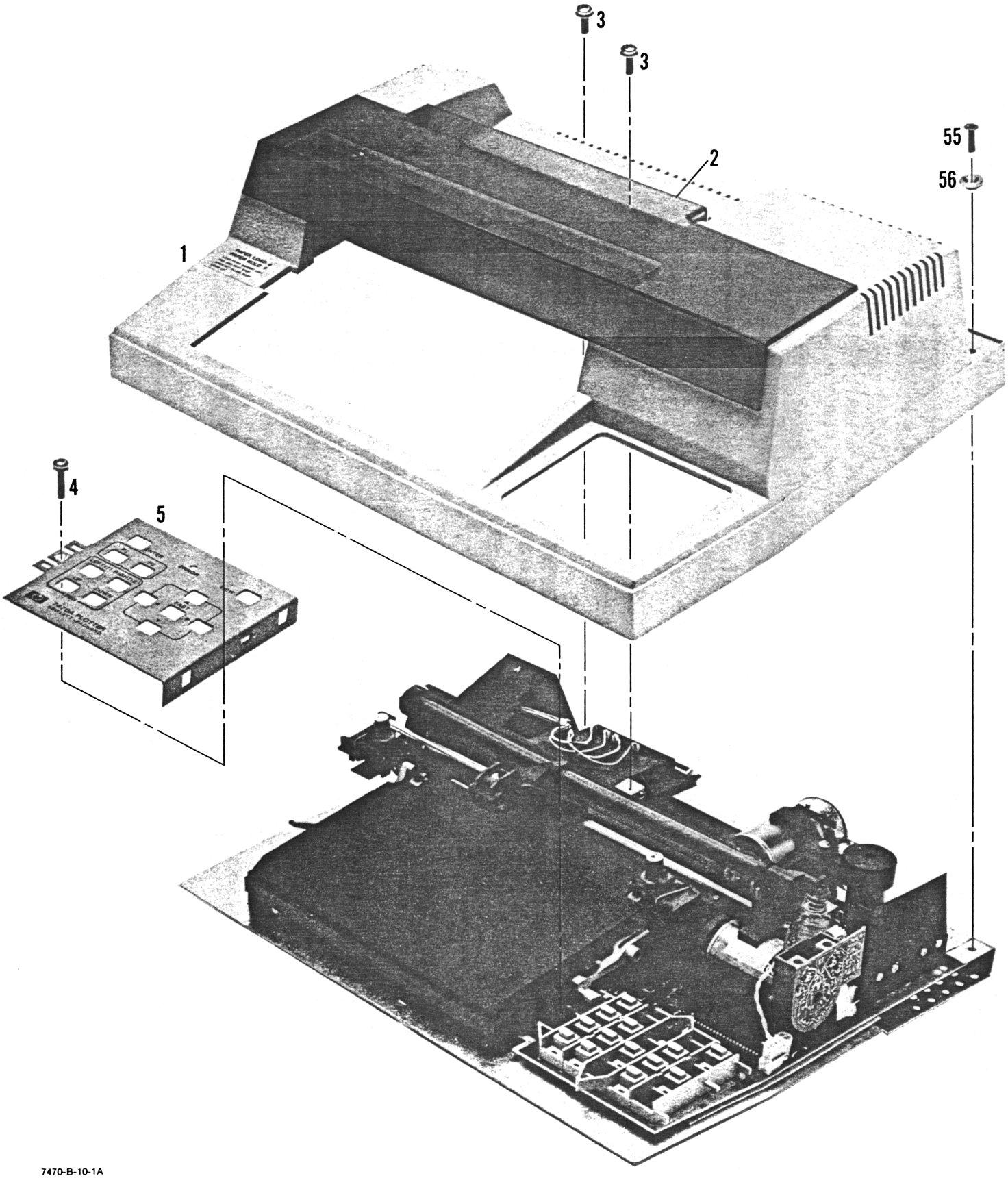
3
3
2
55
56
1
4
5
7470-B-10-1A

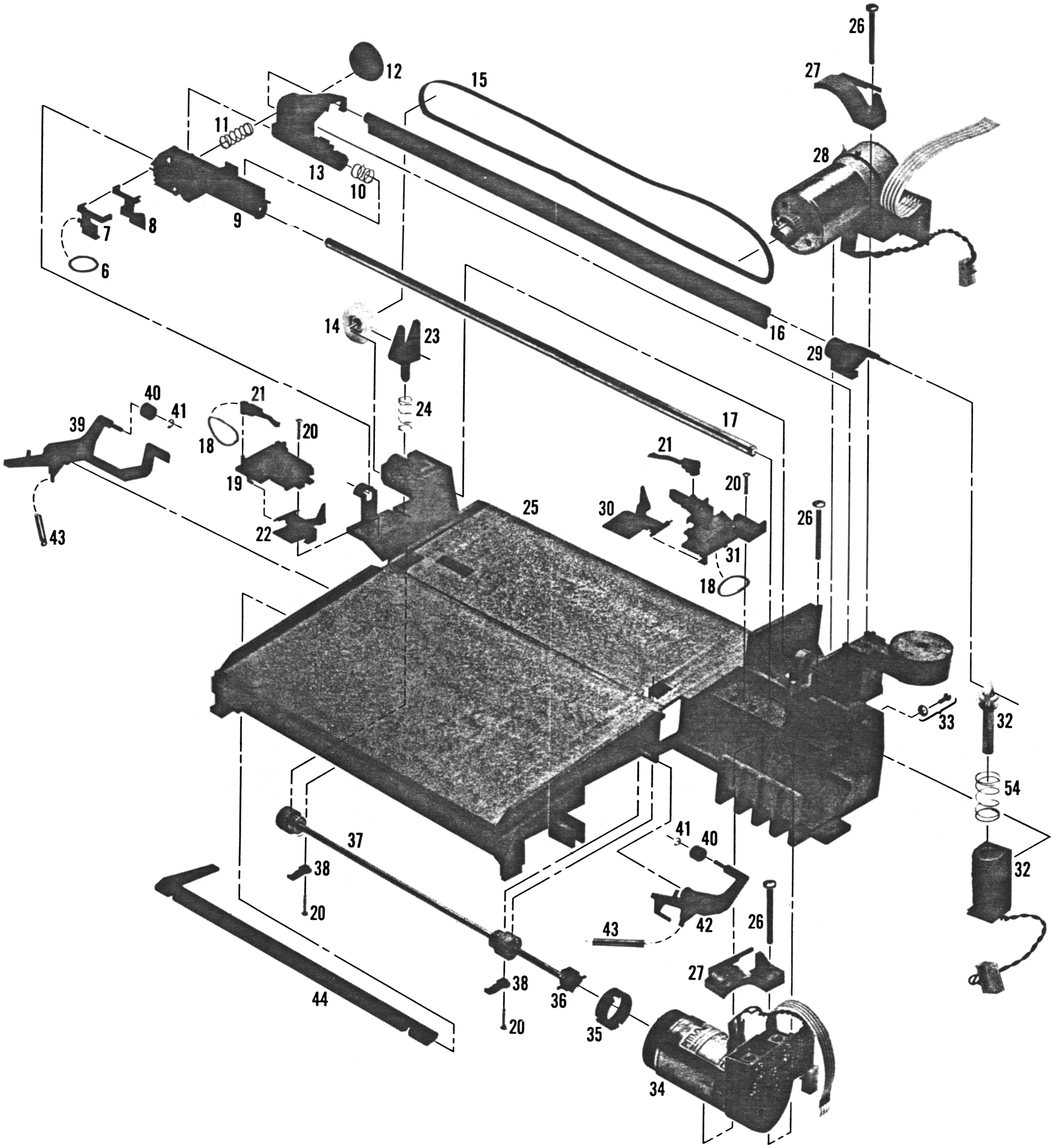
26
27
12
15
28
11
13
10
9
8
7
6
14
23
16
29
40
41
21
24
39
18
20
17
19
21
20
25
30
26
22
31
43
18
33
32
54
37
41
40
38
32
20
42
26
43
27
38
36
44
20
35
34

7470-B-11-1A

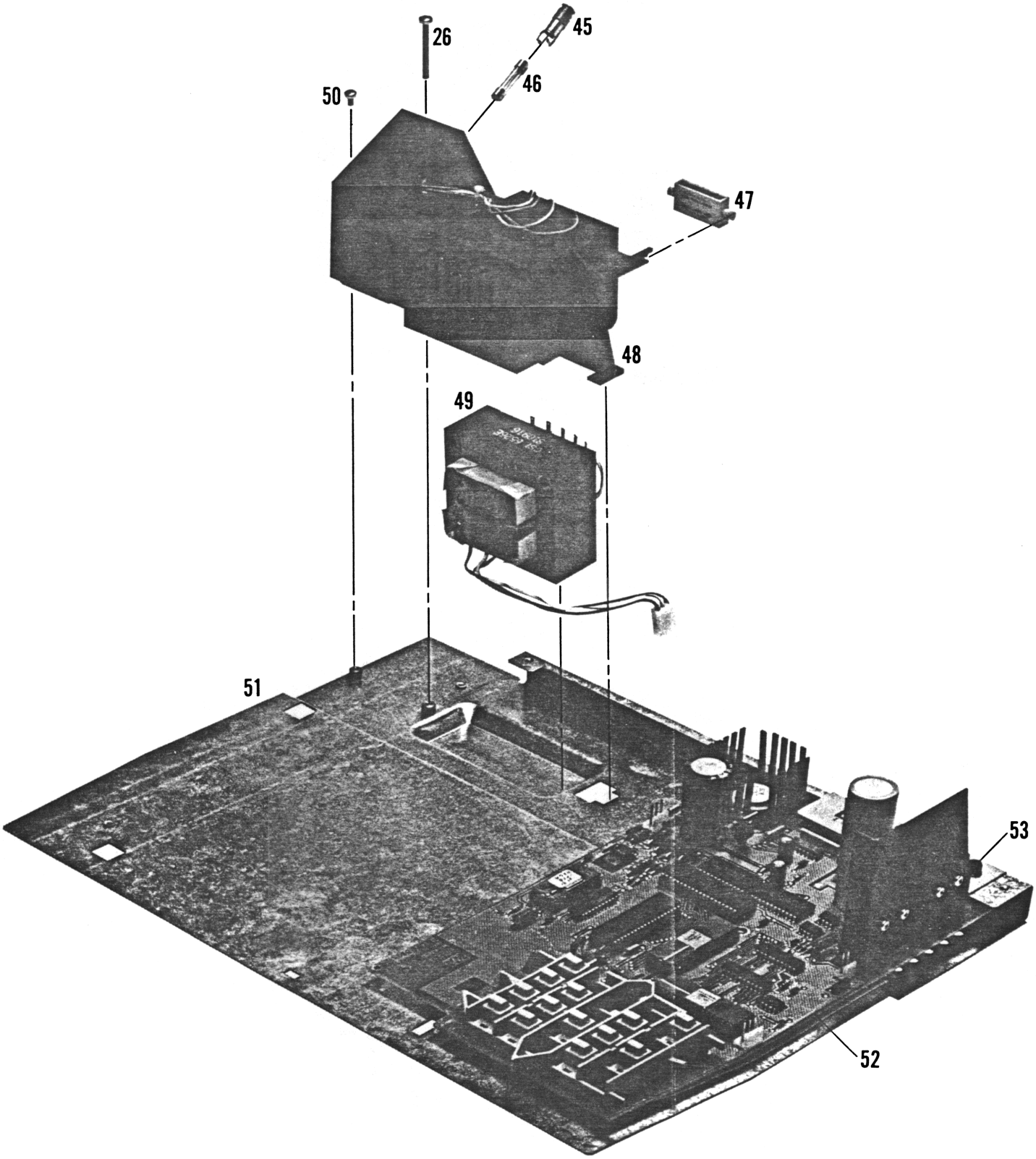

Figure 3-1. Exploded View **E**

7470-B-12-1

Table 3-6. Reference Designations and Abbreviations

REFERENCE DESIGNATIONS

A ..... assembly
AT ..... attenuator; isolator; termination
B ..... fan; motor
BT ..... battery
C ..... capacitor
CP ..... coupler
CR ..... diode; diode thyristor; varactor
DC ..... directional coupler
DL ..... delay line
DS ..... annunciator; signaling device (audible or visual); lamp; LED
E ..... miscellaneous electrical part
F ..... fuse
FL ..... filter
H ..... hardware
HY ..... circulator
J ..... electrical connector (stationary portion) jack
K ..... relay
L ..... coil; inductor
M ..... meter
MP ..... miscellaneous mechanical part
P ..... electrical connector (movable portion); plug
Q ..... transistor; SCR; triode thyristor
R ..... resistor
RT ..... thermistor
S ..... switch
T ..... transformer
TB ..... terminal board
TC ..... thermocouple
TP ..... test point
U ..... integrated circuit; microcircuit
V ..... electron tube
VR ..... voltage regulator; breakdown diode
W ..... cable; transmission path; wire
X ..... socket
Y ..... crystal unit (piezo-electric or quartz)
Z ..... tuned cavity; tuned circuit

ABBREVIATIONS

A ..... ampere
ac ..... alternating current
ACCESS ..... accessory
ADJ ..... adjustment
A/D ..... analog-to-digital
AF ..... audio frequency
AFC ..... automatic frequency control
AGC ..... automatic gain control
AL ..... aluminum
ALC ..... automatic level control
AM ..... amplitude modulation
AMPL ..... amplifier
APC ..... automatic phase control
ASSY ..... assembly
AUX ..... auxiliary
avg ..... average
AWG ..... American wire gauge
BAL ..... balance
BCD ..... binary coded decimal
BD ..... board
BE CU ..... beryllium copper
BFO ..... beat frequency oscillator
BH ..... binder head
BKDN ..... breakdown
BP ..... bandpass
BPF ..... bandpass filter
BRS ..... brass
BWO ..... backward-wave oscillator
CAL ..... calibrate
ccw ..... counterclockwise
CER ..... ceramic
CHAN ..... channel
cm ..... centimetre
CMO ..... cabinet mount only
COAX ..... coaxial
COEF ..... coefficient
COM ..... common
COMP ..... composition
COMPL ..... complete
CONN ..... connector
CP ..... cadmium plate
CRT ..... cathode-ray tube
CTL ..... complementary transistor logic
CW ..... continuous wave
cw ..... clockwise
D/A ..... digital-to-analog
dB ..... decibel
dBm ..... decibel referred to 1 mW
dc ..... direct current
deg ..... degree (temperature interval) or difference
° ..... degree (plane angle)
°C ..... degree Celsius (centigrade)
°F ..... degree Fahrenheit
°K ..... degree Kelvin
DEPC ..... deposited carbon
DET ..... detector
diam ..... diameter
DIA ..... diameter (used in parts list)
DIFF AMPL ..... differential amplifier
div ..... division
DPDT ..... double-pole, double-throw
DR ..... drive
DSB ..... double sideband
DTL ..... diode transistor logic
DVM ..... digital voltmeter
ECL ..... emitter coupled logic
EMF ..... electromotive force
EDP ..... electronic data processing
ELECT ..... electrolytic
ENCAP ..... encapsulated
EXT ..... external
F ..... farad
FET ..... field-effect transistor
F/F ..... flip flop
FH ..... flat head
FIL H ..... fillister head
FM ..... frequency modulation
FP ..... front panel
FREQ ..... frequency
FXD ..... fixed
g ..... gram
GE ..... germanium
GHz ..... gigahertz
GL ..... glass
GRD ..... ground(ed)
H ..... henry
h ..... hour
HET ..... heterodyne
HEX ..... hexagonal
HD ..... head
HDW ..... hardware
HF ..... high frequency
HG ..... mercury
HI ..... high
HP ..... Hewlett-Packard
HPF ..... high pass filter
HR ..... hour (used in parts list)
HV ..... high voltage
Hz ..... Hertz
IC ..... integrated circuit
ID ..... inside diameter
IF ..... intermediate frequency
IMPG ..... impregnated
in. ..... inch
INCD ..... incandescent
INCL ..... include(s)
INP ..... input
INS ..... insulation
INT ..... internal
kg ..... kilogram
kHz ..... kilohertz
kΩ ..... kilohm
kV ..... kilovolt
lb ..... pound
LC ..... inductance-capacitance
LED ..... light-emitting diode
LF ..... low frequency
LG ..... long
LH ..... left hand
LIM ..... limit
LIN ..... linear taper (used in parts list)
lin ..... linear
LK WASH ..... lock washer
LO ..... low; local oscillator
LOG ..... logarithmic taper (used in parts list)
log ..... logarithm(ic)
LPF ..... low pass filter
LV ..... low voltage
m ..... metre (distance)
mA ..... milliampere
MAX ..... maximum
MΩ ..... megohm
MEG ..... meg (10^6) (used in parts list)
MET FLM ..... metal film
MET OX ..... metallic oxide
MF ..... medium frequency; microfarad (used in parts list)
MFR ..... manufacturer
mg ..... milligram
MHz ..... megahertz
mH ..... millihenry
mho ..... mho
MIN ..... minimum
min ..... minute (time)
′ ..... minute (plane angle)
MINAT ..... miniature
mm ..... millimetre
MOD ..... modulator

NOTE

All abbreviations in the parts list will be in uppercase.

1-A-24-1

Table 3-6. Reference Designations and Abbreviations (Continued)

MOM	momentary
MOS	metal-oxide semiconductor
ms	millisecond
MTG	mounting
MTR	meter (indicating device)
mV	millivolt
mVac	millivolt, ac
mVdc	millivolt, dc
mVpk	millivolt, peak
mVp-p	millivolt, peak-to-peak
mVrms	millivolt, rms
mW	milliwatt
MUX	multiplex
MY	mylar
μA	microampere
μF	microfarad
μH	microhenry
μmho	micromho
μs	microsecond
μV	microvolt
μVac	microvolt, ac
μVdc	microvolt, dc
μVpk	microvolt, peak
μVp-p	microvolt, peak-to-peak
μVrms	microvolt, rms
μW	microwatt
nA	nanoampere
NC	no connection
N/C	normally closed
NEG	negative
nF	nanofarad
NI PL	nickel plate
N/O	normally open
NOM	nominal
NORM	normal
NPN	negative-positive-negative
NPO	negative-positive zero (zero temperature coefficient)
NRFR	not recommended for field replacement
NSR	not separately replaceable
ns	nanosecond
nW	nanowatt
OBD	order by description
OD	outside diameter
OH	oval head
OP AMPL	operational amplifier
OPT	option
OSC	oscillator
OX	oxide
oz	ounce
Ω	ohm
P	peak (used in parts list)
PAM	pulse-amplitude modulation
PC	printed circuit
PCM	pulse-code-modulation; pulse-count modulation
PDM	pulse-duration modulation
pF	picofarad
PIV	peak inverse voltage
pk	peak
PNP	positive-negative-positive
P/O	part of
POLY	polystyrene
PORC	porcelain
POS	positive; position(s) (used in parts list)
POSN	position
POT	potentiometer
p-p	peak-to-peak
PP	peak-to-peak (used in parts list)
PPM	pulse-position modulation; parts per million
PREAMPL	preamplifier
PRF	pulse-repetition frequency
PRR	pulse repetition rate
ps	picosecond
PT	point
PTM	pulse-time modulation
PWN	pulse-width modulation
PWV	peak working voltage
RC	resistance-capacitance
RECT	rectifier
REF	reference
REG	regulated
REPL	replaceable
RF	radio frequency
RFI	radio frequency interference
RH	round head; right hand
RLC	resistance-inductance-capacitance
RMO	rack mount only
rms	root-mean-square
RND	round
ROM	read only memory
R & P	rack and panel
RWV	reverse working voltage
S	scattering parameter
s	second (time)
″	second (plane angle)
S-B	slow-blow (fuse) (used in parts list)
SCR	silicon controlled rectifier; screw
SE	selenium
SECT	sections
SEMICON	semi-conductor
SHF	superhigh frequency
SI	silicon
SIL	silver
SL	slide
SNR	signal-to-noise ratio
SPDT	single-pole, double-throw
SPG	spring
SR	split ring
SPST	single-pole, single-throw
SSB	single sideband
SST	stainless steel
STL	steel
SQ	square
SWR	standing-wave ratio
SYNC	synchronize
T	timed (slow-blow fuse)
TA	tantalum
TC	temperature coefficient
TD	time delay
TERM	terminal
TFT	thin-film transistor
TGL	toggle
THD	thread
THRU	through
TI	titanium
TOL	tolerance
TRIM	trimmer
TSTR	transistor
TTL	transistor-transistor logic
U	micro (10^{-6}) (used in parts list)
UF	microfarad (used in parts list)
UHF	ultrahigh frequency
UNREG	unregulated
V	volt
VA	voltampere
Vac	volts, ac
VAR	variable
Vdc	volts, dc
VDCW	volts, dc, working (used in parts list)
Vpk	volts, peak
Vp-p	volts, peak-to-peak
Vrms	volts, rms
VTVM	vacuum-tube voltmeter
V(X)	volts, switched
W	watt
W/	with
WIV	working inverse voltage
WW	wirewound
W/O	without
Z_o	characteristic impedance

NOTE

All abbreviations in the parts list will be in uppercase.

MULTIPLIERS

Abbreviation	Prefix	Multiple
T	tera	10^{12}
G	giga	10^{9}
M	mega	10^{6}
k	kilo	10^{3}
da	deka	10
d	deci	10^{-1}
c	centi	10^{-2}
m	milli	10^{-3}
μ	micro	10^{-6}
n	nano	10^{-9}
p	pico	10^{-12}
f	femto	10^{-15}
a	atto	10^{-18}

1-A-25-1

SECTION IV

MANUAL CHANGES

4-1. INTRODUCTION

4-2. This section contains information needed to adapt this manual to plotters with serial prefixes lower than the one shown on the title page.

4-3. When revised pages are inserted in the manual, the old pages that are removed because of a modification to the plotter must be filed in Section IV. This will provide a history of plotter modifications by serial prefix number. Insert the old page (for this section) found in the Update Package. The CHANGE page identifies and states the reason for the modification, the serial prefix at which the modification occurred, and lists the pages involved. The information on the old pages applies to plotters with serial prefixes lower than the one at which the modification occurred. Old pages that were revised because of errors may be discarded.

4-4. When applying this Manual Change information to a plotter with a serial prefix number lower than the one at which the latest change occurred, begin with the latest change and work back to and including the change that lists the serial prefix number of the plotter on hand. Modifications which occurred before this prefix number have been incorporated into the plotter.

4-5. CHANGES

4-6. Refer to the back of the title page in this manual for a table of revised pages.

CHANGE 1
COVER SHEET

This change affects only the RS-232-C (Option 001) version of the plotter. The printed circuit assembly (PCA) 07470-60101, REV D and lower, used HP Part No. 1818-1335 for U18 and U19, 256 × 8 RAMs. This part number is no longer available, and the two ICs have been replaced on REV E of the PCA by U18, Part No. 1818-3014, a 1 k × 8 RAM.

On REV E, a decoder, U19, was added to supply the chip select signal to the ROM, U17. A quad NAND gate IC, U20, was added to decode read, write, and chip enable signals to the RAM, U18. This change is effective beginning with Serial Prefix 2250. REV D (and earlier) and REV E PCAs are functionally identical and directly interchangeable.

On a REV D or earlier PCA, if either U18 or U19 (RAM ICs) is defective, the PCA should be replaced with a REV E PCA.

INSERT OLD PAGES 3-4 AND 5-25 BEHIND THIS PAGE.

THIS CHANGE IS EFFECTIVE BEGINNING WITH SERIAL PREFIX 2250.

Table 3-1. Parts List, Main PCA, RS-323-C, Option 001 (Continued)

Reference Designation	HP Part Number	C D	Qty	Description	Mfr Code	Mfr Part Number
A1F3	2110-0577	3	1	FUSE .75A 125V .281X.093	75915	275.750
A1H1	0535-0031	2	6	NUT-HEX W/LKWR M3 X 0.5 2.4MM-THK	00000	ORDER BY DESCRIPTION
A1H2	0535-0031	2		NUT-HEX W/LKWR M3 X 0.5 2.4MM-THK	00000	ORDER BY DESCRIPTION
A1H3	0535-0031	2		NUT-HEX W/LKWR M3 X 0.5 2.4MM-THK	00000	ORDER BY DESCRIPTION
A1H4	0535-0031	2		NUT-HEX W/LKWR M3 X 0.5 2.4MM-THK	00000	ORDER BY DESCRIPTION
A1H5	0535-0031	2		NUT-HEX W/LKWR M3 X 0.5 2.4MM-THK	00000	ORDER BY DESCRIPTION
A1H6	0535-0031	2		NUT-HEX W/LKWR M3 X 0.5 2.4MM-THK	00000	ORDER BY DESCRIPTION
A1H7	0515-0055	8	4	SCREW-MACH M3 X 0.5 6MM-LG PAN-HD	28480	0515-0055
A1H8	0515-0055	8		SCREW-MACH M3 X 0.5 6MM-LG PAN-HD	28480	0515-0055
A1H9	0515-0055	8		SCREW-MACH M3 X 0.5 6MM-LG PAN-HD	28480	0515-0055
A1H10	0515-0055	8		SCREW-MACH M3 X 0.5 6MM-LG PAN-HD	28480	0515-0055
A1J1	1200-0575	1	2	SOCKET-STRP 4-CONT SIP DIP-SLDR	28480	1200-0575
A1J2	1251-3192	1	2	CONNECTOR 3-PIN M POST TYPE	28480	1251-3192
A1J3	1251-4245	7	2	CONNECTOR 2-PIN M POST TYPE	28480	1251-4245
A1J4	1251-4946	5	1	CONNECTOR 25-PIN F D SUBMIN	28480	1251-4946
A1J5	1251-4245	7		CONNECTOR 2-PIN M POST TYPE	28480	1251-4245
A1J6	1200-0575	1		SOCKET-STRP 4-CONT SIP DIP-SLDR	28480	1200-0575
A1J7	1251-3192	1		CONNECTOR 3-PIN M POST TYPE	28480	1251-3192
A1L1	9100-1788	6	1	CHOKE-WIDE BAND ZMAX=680 OHM@ 180 MHZ	02114	VK200 20/48
A1MP1	07470-40038	6	1	SPACER-LED	28480	07470-40038
A1Q1	1854-0921	6	4	TRANSISTOR NPN DARL TO-220AB PD=2W	28480	1854-0921
A1Q2	1854-0921	6		TRANSISTOR NPN DARL TO-220AB PD=2W	28480	1854-0921
A1Q3	1854-0921	6		TRANSISTOR NPN DARL TO-220AB PD=2W	28480	1854-0921
A1Q4	1854-0921	6		TRANSISTOR NPN DARL TO-220AB PD=2W	28480	1854-0921
A1Q5	1853-0509	4	4	TRANSISTOR PNP TO-220AB PD=2W FT=3MHZ	28480	1853-0509
A1Q6	1853-0509	4		TRANSISTOR PNP TO-220AB PD=2W FT=3MHZ	28480	1853-0509
A1Q7	1853-0509	4		TRANSISTOR PNP TO-220AB PD=2W FT=3MHZ	28480	1853-0509
A1Q8	1853-0509	4		TRANSISTOR PNP TO-220AB PD=2W FT=3MHZ	28480	1853-0509
A1Q9	1853-0059	9	1	TRANSISTOR PNP 2N3791 SI TO-3 PD=150W	04713	2N3791
E A1Q10	1854-0932	9	1	TRANSISTOR-NPN TIP 31A	28480	1854-0932
A1R1	0811-3456	7	1	RESISTOR .1 3% 1W PW TC=0+-90	28480	0811-3456
A1R2	0699-0982	8	4	RESISTOR-FXD 1K OHM 5% 2W	28480	0699-0982
A1R3	0699-0982	8		RESISTOR-FXD 1K OHM 5% 2W	28480	0699-0982
A1R4	0699-0982	8		RESISTOR-FXD 1K OHM 5% 2W	28480	0699-0982
A1R5	0699-0982	8		RESISTOR-FXD 1K OHM 5% 2W	28480	0699-0982
A1R6	0757-0288	1	1	RESISTOR 9.09K 1% .125W F TC=0+-100	19701	MF4C1/8-T0-9091-F
A1R7	0698-3444	1	1	RESISTOR 316 1% .125W F TC=0+-100	24546	C4-1/8-T0-316R-F
A1R8	0757-0280	3	3	RESISTOR 1K 1% .125W F TC=0+-100	24546	C4-1/8-T0-1001-F
A1R9	0683-1055	5	1	RESISTOR 1M 5% .25W FC TC=-800/+900	01121	CB1055
A1R10	0757-0280	3		RESISTOR 1K 1% .125W F TC=0+-100	24546	C4-1/8-T0-1001-F
A1R11	0757-0274	5	1	RESISTOR 1.21K 1% .125W F TC=0+-100	24546	C4-1/8-T0-1211-F
A1R12	0699-0975	9	2	RESISTOR-FXD 10 OHM 2%	28480	0699-0975
A1R13	0698-3622	7	1	RESISTOR 120 5% 2W MO TC=0+-200	28480	0698-3622
A1R14	0699-0975	9		RESISTOR-FXD 10 OHM 2%	28480	0699-0975
A1R15	0698-4483	0	1	RESISTOR 18.7K 1% .125W F TC=0+-100	24546	C4-1/8-T0-1872-F
A1R16	0757-0280	3		RESISTOR 1K 1% .125W F TC=0+-100	24546	C4-1/8-T0-1001-F
A1R17	0757-0818	3	1	RESISTOR 825 1% .5W F TC=0+-100	28480	0757-0818
A1R18	0757-0401	0	1	RESISTOR 100 1% .125W F TC=0+-100	24546	C4-1/8-T0-101-F
A1R19	0699-0263	8	1	RESISTOR 26.1 2% .25W F TC=0+-100	28480	0699-0263
A1R20	0698-3435	0	1	RESISTOR 38.3 1% .125W F TC=0+-100	24546	C4-1/8-T0-38R3-F
A1R21	0698-3155	1	1	RESISTOR 4.64K 1% .125W F TC=0+-100	24546	C4-1/8-T0-4641-F
A1RN1	1810-0279	5	3	NETWORK-RES 10-SIP4.7K OHM X 9	01121	210A472
A1RN2	1810-0279	5		NETWORK-RES 10-SIP4.7K OHM X 9	01121	210A472
A1RN3	1810-0279	5		NETWORK-RES 10-SIP4.7K OHM X 9	01121	210A472
A1S1	3101-1856	5	1	SWITCH-RKR DIP-RKR-ASSY 8-1A .05A 30VDC	28480	3101-1856
A1U1	1820-2715	9	3	IC DRVR TTL NAND DUAL 2-INP	01295	SN75447P
A1U2	1820-2753	5	1	IC MISC CMOS	31471	UA-4 MASKED
A1U3	1820-2715	9		IC DRVR TTL NAND DUAL 2-INP	01295	SN75447P
A1U4	1820-2715	9		IC DRVR TTL NAND DUAL 2-INP	01295	SN75447P
A1U5	1826-0412	1	1	IC COMPARATOR PRCN DUAL 8-DIP-P PKG	27014	LM393N
A1U6	1820-2744	4	2	IC-1MC3-0005	28480	1820-2744
A1U7	1820-2744	4		IC-1MC3-0005	28480	1820-2744
A1U8	1820-0509	5	1	IC DRVR DTL LINE DRVR QUAD	04713	MC1488L
A1U9	1820-2754	6	1	IC MISC CMOS	31471	UA-4 MASKED
A1U10	1820-1438	1	2	IC MUXR/DATA-SEL TTL LS 2-TO-1-LINE QUAD	01295	SN74LS257AN
A1U11	1820-1438	1		IC MUXR/DATA-SEL TTL LS 2-TO-1-LINE QUAD	01295	SN74LS257AN
A1U12	1820-0990	8	1	IC RCVR DTL NAND LINE QUAD	01295	SN75189AJ
A1U13	1820-2470	3	1	IC-DIGITAL MC6850P	28480	1820-2470
A1U14	1820-2099	2	1	IC MICPROC NMOS 8-BIT	04713	MC6802P
A1U15	1826-0904	6	1	IC-LM330T-5.0	28480	1826-0904

Table 3-1. Parts List, Main PCA, RS-323-C, Option 001 (Continued)

	Reference Designation	HP Part Number	C D	Qty	Description	Mfr Code	Mfr Part Number
E	A1U16	1818-3004	6	1	ROM-8K X 8	28480	1818-3004
	A1U17	1818-3003	5	1	ROM-4K X 8	28480	1818-3003
	A1U18	1818-1335	2	2	IC NMOS 2048 (2K) STAT RAM 500-NS	08863	35392CP
	A1U19	1818-1335	2		IC NMOS 2048 (2K) STAT RAM 500-NS	08863	35392CP
	A1VR1	1902-3094	3	1	DIODE-ZNR 5.11V 2% DO-35 PD=.4W	28480	1902-3094
	A1VR2	1902-0551	1	2	DIODE-ZNR 6.2V 5% PD=1W IR=10UA	28480	1902-0551
	A1VR3	1902-0551	1		DIODE-ZNR 6.2V 5% PD=1W IR=10UA	28480	1902-0551
	A1VR4	1902-0952	6	1	DIODE-ZNR 5.6V 5% DO-35 PD=.4W TC=+.046%	28480	1902-0952
	A1VR5	1902-3114	8	2	DIODE-ZNR 6.19V 2% DO-35 PD=.4W	28480	1902-3114
	A1VR6	1902-3114	8		DIODE-ZNR 6.19V 2% DO-35 PD=.4W	28480	1902-3114
E	A1W1	8159-0005	0	1	WIRE 22 AWG	28480	8159-0005
	A1Y1	0410-1334	6	1	CRYSTAL-4.00 MHZ	28480	0410-1334

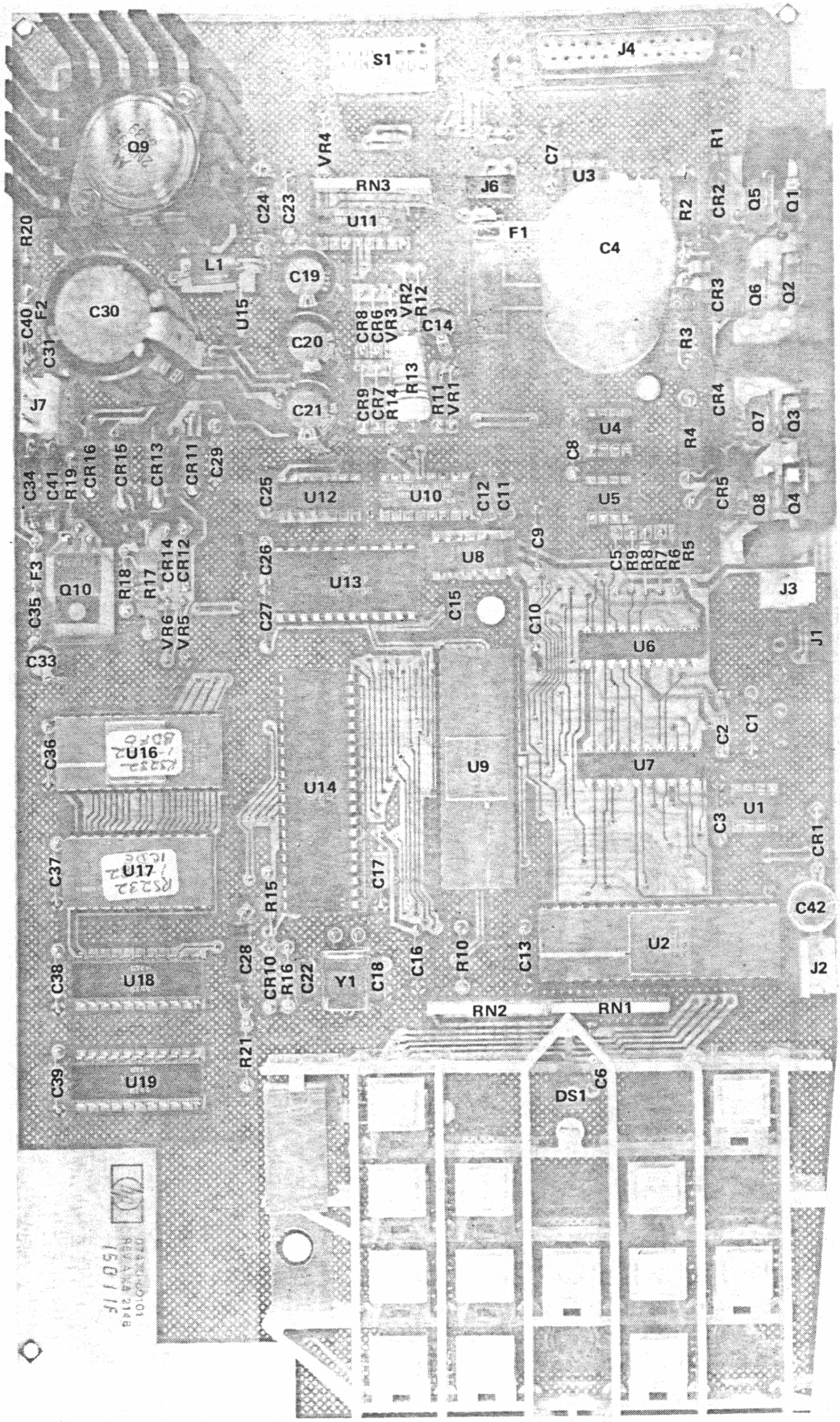

7470-A-22-1

OPTION 001
07470-60101

PART OF A1 MAIN PCA D7470-60101(RS232-C/CCITT V.24 OPTION 001)

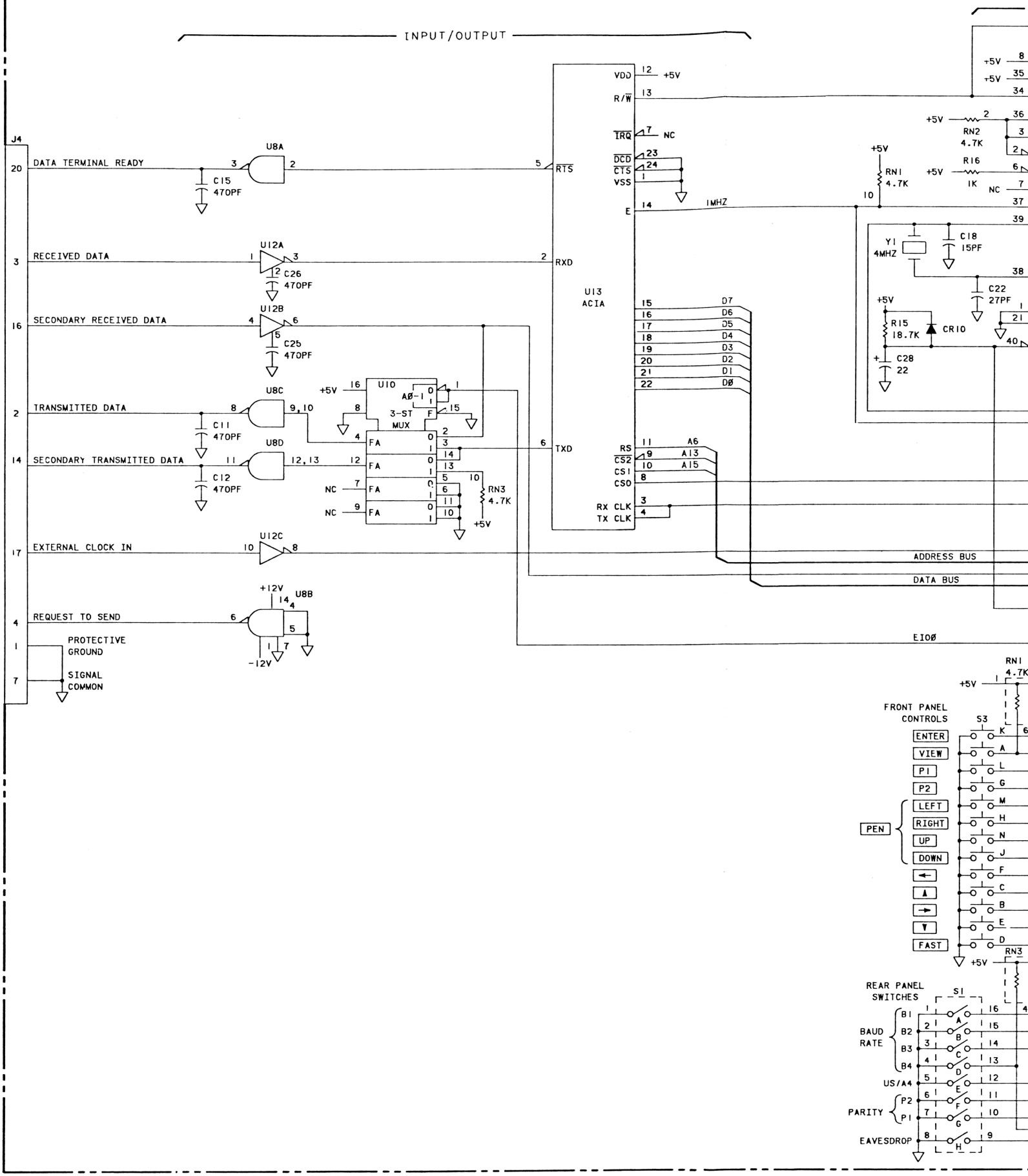

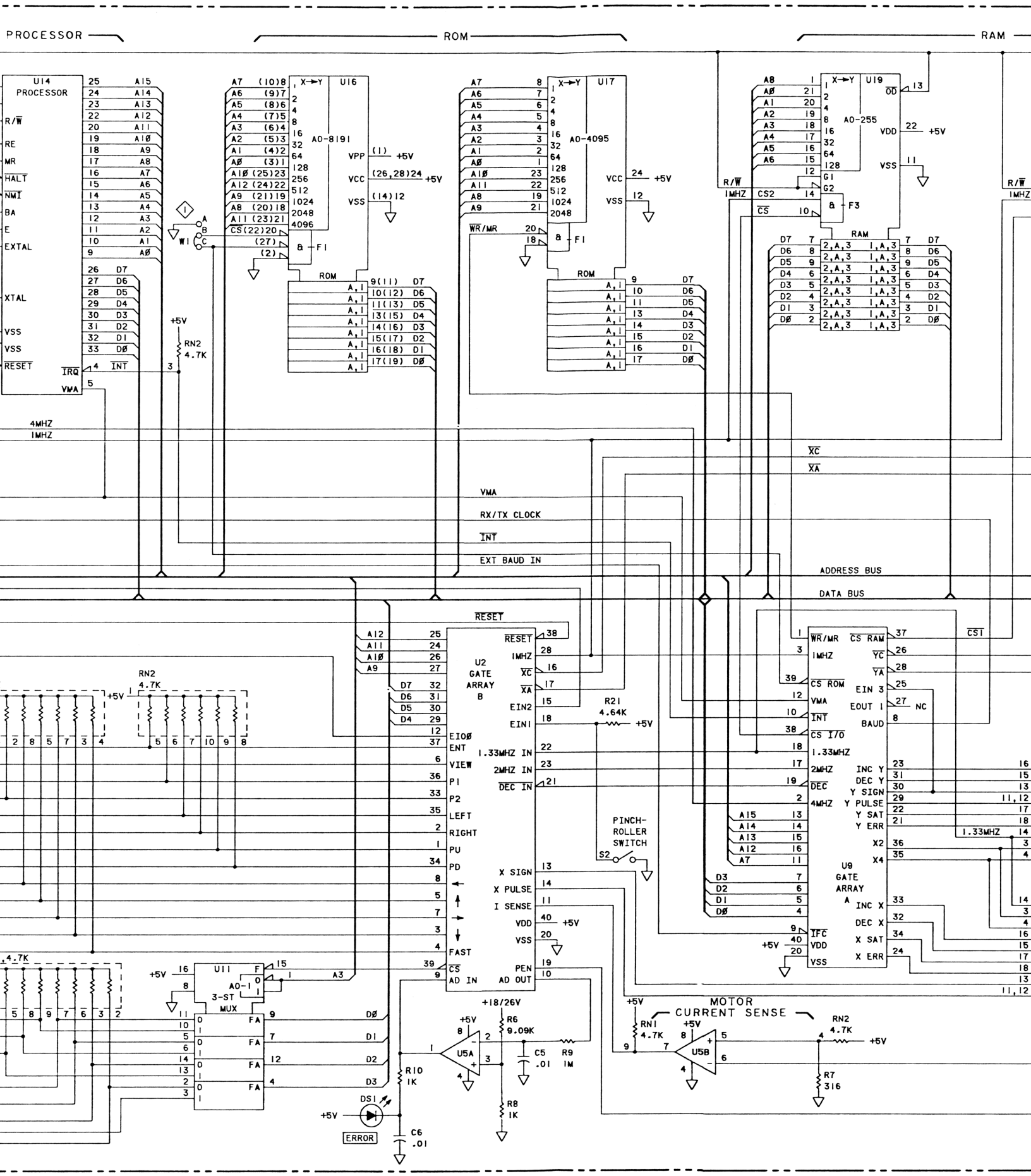
PROCESSOR
ROM
RAM
U14 PROCESSOR
R/W
RE
MR
HALT
NMI
BA
E
EXTAL
XTAL
VSS
VSS
RESET
IRQ
VMA
INT
D7
D6
D5
D4
D3
D2
D1
D0
A15
A14
A13
A12
A11
A10
A9
A8
A7
A6
A5
A4
A3
A2
A1
A0
U16
A0-8191
VPP
VCC
VSS
CS(22)
ROM
U17
A0-4095
WR/MR
U19
A0-255
OD
VDD
G1
G2
CS2
CS
F1
F3
RAM
+5V
RN2
4.7K
W1
4MHZ
1MHZ
XC
XA
VMA
RX/TX CLOCK
INT
EXT BAUD IN
ADDRESS BUS
DATA BUS
RESET
U2 GATE ARRAY B
EIO0
ENT
VIEW
P1
P2
LEFT
RIGHT
PU
PD
FAST
CS
AD IN
EIN2
EIN1
1.33MHZ IN
2MHZ IN
DEC IN
X SIGN
X PULSE
I SENSE
PEN
AD OUT
R21
4.64K
PINCH-ROLLER SWITCH
S2
U9 GATE ARRAY A
CS RAM
CS ROM
CS I/O
EIN 3
EOUT 1
BAUD
INC Y
DEC Y
Y SIGN
Y PULSE
Y SAT
Y ERR
X2
X4
INC X
DEC X
X SAT
X ERR
IFC
CST
NC
U11
A0-1
3-ST MUX
FA
A3
+18/26V
R6
9.09K
C5
.01
R9
1M
U5A
R10
1K
R8
1K
DS1
ERROR
C6
.01
MOTOR CURRENT SENSE
RN1
4.7K
U5B
R7
316

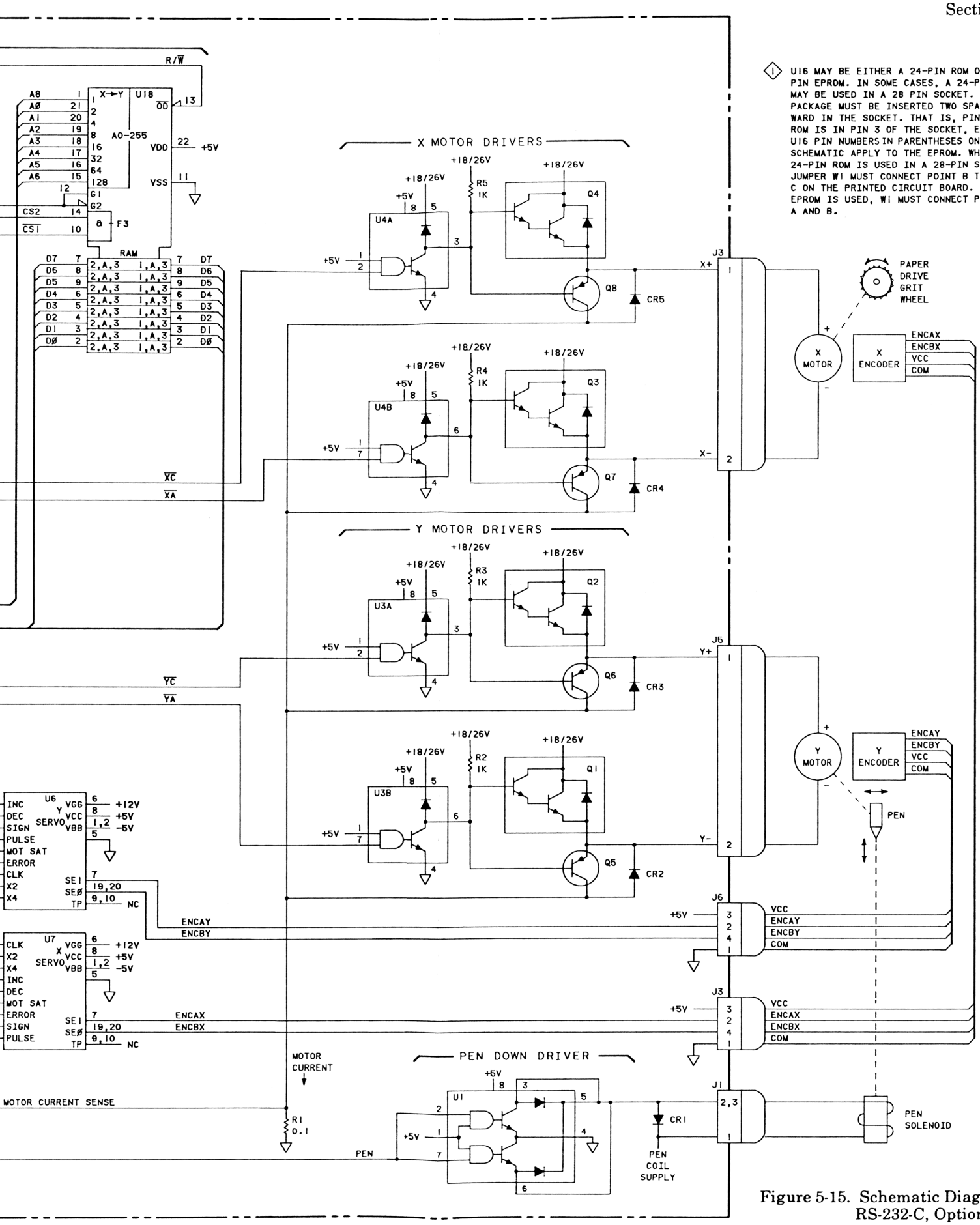

Figure 5-15. Schematic Diagram, RS-232-C, Option 001 **E**

SECTION V

SERVICE

5-1. INTRODUCTION

5-2. This section contains information needed for maintenance and repair of the Model 7470A, including:

Circuit Description
Parts Removal and Replacement
Troubleshooting Information
Schematic Diagrams
Component Location Figures

5-3. BASICALLY, THIS IS HOW IT WORKS

5-4. The Model 7470A uses microprocessor-based logic to convert digital instructions into a graphic plot. The microprocessor receives instructions from an external controller through the I/O (Input/Output) circuits. It then issues data to the X-axis and Y-axis motor drive circuits and the pen down circuit to produce the plot.

5-5. The X-axis and Y-axis motors are reversible dc motors. An encoder on each motor transmits rotation data back to the servo chip. One motor drives grit wheels which move the plotting medium in the X axis, while the other motor moves the pen across the plotting surface in the Y axis.

5-6. Refer to the schematic diagrams at the end of this section while reading the following circuit descriptions.

5-7. RS-232-C/CCITT V.24 INTERFACE (Option 001)

5-8. The Option 001 I/O (Input/Output) is an asynchronous full-duplex bit-serial interface for hardwired connection to a computer or terminal. Interface connections are shown on the schematic diagram at the end of this section. This interface is compatible with EIA Standard RS-232-C and with CCITT V.24. Input and output are controlled in the 7470A by an Asynchronous Communication Information Adapter (ACIA) and a multiplexer.

5-9. DATA INPUT AND OUTPUT CIRCUITS. Because signals within the 7470A are positive-true TTL levels, inverting line drivers and receivers are used to convert the logic and voltage between the levels required by the interface system (shown in Table 5-1) and the internal levels. Figure 5-1 is a diagram of the I/O circuits and the ACIA. The Request to Send output from the ACIA provides a Data Terminal Ready signal which may be used for hardwire handshake. The Request to Send output at the I/O connector is always true.

5-10. ACIA. The logic level on the Read/$\overline{\text{Write}}$ input controls the direction of data flow through the data bus interface. When the RS (Register Select) input is high, the R/$\overline{\text{W}}$ input selects either the receive or transmit data register. When RS is low, the control/status registers are selected. The 1 MHz signal at the E input clocks data in and out of the ACIA on the data bus (D7-D0) and the RX/TX clock (Baud Rate Clock) clocks data in and out on the RXD (Received Data) and TXD (Transmitted Data) lines.

5-11. MULTIPLEXER. When the address line (EIO0) is high, the 7470A transmitted data go out on the Transmitted Data line (pin 2). The Secondary Transmitted Dada line (pin 14) is held at a negative voltage. When EIO0 is low, information on the Secondary Received Data line is retransmitted on the Transmitted Data line (pin 2), and the 7470A transmitted data go out on the Secondary Transmitted Data line (pin 14).

5-12. REAR PANEL SWITCHES (Option 001)

5-13. BAUD RATE. The internal baud rate (transmit/receive) clock signal is derived in Gate Array A from the 4 MHz clock signal. The baud rate clock frequency is sixteen times the desired baud rate. Baud rate may be selected by means of the rear panel switches, or an external clock signal may be used. Table 5-2 shows the switch settings required. Disregard any markings on the switch itself and use the 1 and 0 markings on the rear panel to determine baud rate.

Table 5-1. RS-232-C/CCITT V.24 Interface Signal Levels

NOTATION	INTERCHANGE VOLTAGE	
	Negative (More Negative than −3 V)	Positive (More Positive than +3 V)
Binary State	1	0
Signal Condition	Marking	Spacing
Function	off	on

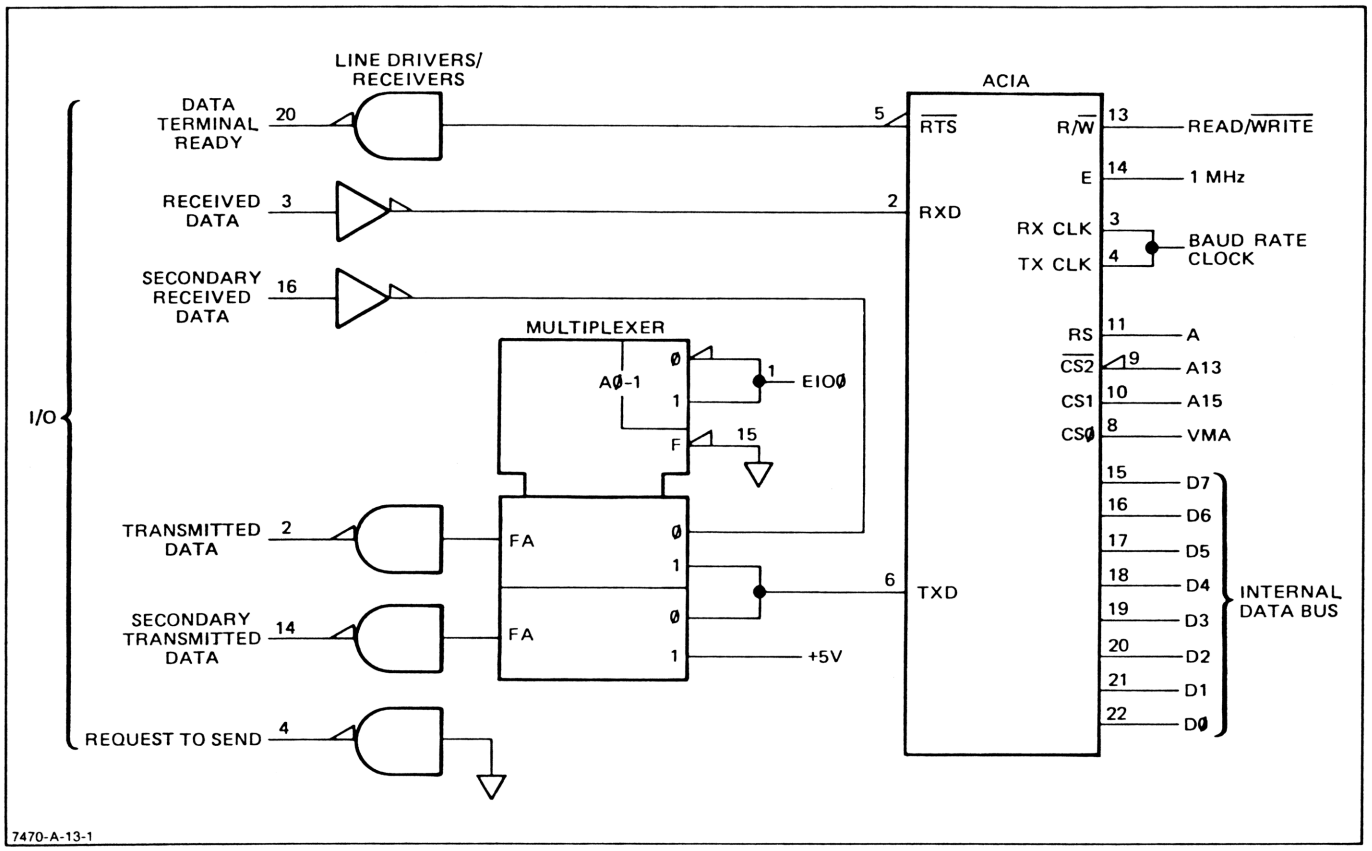

Figure 5-1. RS-232-C/CCITT V.24 Interface Circuits

Table 5-2. Baud Rate Selection

REAR PANEL SWITCHES B4	B3	B2	B1	BAUD RATE
0	0	0	0	External
0	0	0	1	75
0	0	1	0	110
0	0	1	1	150
0	1	0	0	200
0	1	0	1	300
0	1	1	0	600
0	1	1	1	1 200
1	0	0	0	2 400
1	0	0	1	4 800
1	0	1	0	9 600

1 = Switch Open; 0 = Switch Closed

5-14. PARITY. Two rear panel switches are used for parity selection. When the PARITY/NONE (or ON/OFF) switch is set to PARITY (ON), the other switch selects ODD or EVEN parity.

5-15. US/A4. This switch is used to program the plotting area for two paper sizes:

Switch Position	Maximum Plotting Area
US	7.5 × 10.2 in.
A4	190 × 273mm

5-16. EAVESDROP. The special Eavesdrop cable, Option 016, is necessary for operation in this mode. When the EAVESDROP switch is in the Y position, received data are retransmitted and the plotter does not respond unless it is given a "Plotter On" instruction. When this switch is in the D position, the plotter responds to all recognized commands.

5-17. HP-IB INTERFACE (Option 002)

5-18. The Hewlett-Packard Interface Bus Option 002 is compatible with IEEE Standard 488-1978. Interface connections are shown on the schematic diagram at the end of this section and are listed in Table 5-3. Input/Output voltage levels must meet TTL requirements (low = ≤0.8 V; high = ≥2.0 V). All signals are active low (true).

5-19. All data and control signals to and from the HP-IB go through the bus transceivers, which are enabled to transmit or to receive by the interface adapter in response to HP-IB commands. The interface adapter automatically handles all handshake requirements on the HP-IB. When the plotter power is on, the bus transceiver inputs are high impedance to prevent loading the data lines. When the plotter power is off, the bus transceivers present an open circuit to all data lines; consequently, the plotter does not interfere with other HP-IB operations.

5-20. When the ATN input is low, the plotter compares the data on the HP-IB DIO lines to the address set by the rear panel address switches, and responds when

Table 5-3. HP-IB Interface Lines

INTERFACE LINES	MNEMONIC	INPUT/OUTPUT CONNECTOR PIN NO.
Data		
Data Input/Output	DIO1	1
	DIO2	2
	DIO3	3
	DIO4	4
	DIO5	13
	DIO6	14
	DIO7	15
	DIO8	16
Data Transfer Control		
Data Valid	DAV	6
Not Ready for Data	NRFD	7
Not Data Accepted	NDAC	8
General Management		
End or Identify	EOI	5
Interface Clear	IFC	9
Service Request	SRQ	10
Attention	ATN	11
Remote Enable	REN	17

addressed by the bus controller to listen or talk. When the ATN input is high and the plotter is addressed to listen, the interface adapter accepts and processes the data on the DIO lines.

5-21. The interface adapter is enabled by a low true Chip Select (CS) signal from Gate Array A. When the interface adapter is enabled and its Read/Write (R/W) input is high, data can be read from the adapter, and when the R/W input is low, data can be written by the processor into the adapter. The R/W input and the three register selection inputs, RS0-RS2, select the proper register in the interface adapter.

5-22. REAR PANEL SWITCHES (Option 002)

5-23. ADDRESS. The plotter's HP-IB address is set by five of the seven switches on the rear panel. Disregard any markings on the switch itself and use the 1 and 0 labels on the rear panel to determine the address in binary coded decimal.

5-24. US/A4. This switch is used to program the plotting area for two paper sizes:

Switch Position	Maximum Plotting Area
US	7.5 × 10.2 in.
A4	190 × 273mm

5-25. HEWLETT-PACKARD INTERFACE LOOP (Option 003)

5-26. The Option 003 I/O allows the 7470A to interface with a controlling device by means of transformer coupling in the receive and transmit lines. An interface chip converts the received serial data to bit-parallel, byte-serial form. Figure 5-2 is a diagram of the HP-IL I/O circuits. The electrical connection from one device to the next is a differential, voltage-mode, two-wire, balanced line. Both wires are floating with respect to circuit common (and earth) in both devices. Signal encoding is illustrated in Figure 5-2, with RXD0 used as the reference. Voltages shown are nominal, and pulse width is about one microsecond, clocked by a 2 MHz oscillator in the HP-IL chip. A two-microsecond zero-level delay is required between data bits.

5-27. In the 7470A internal circuits, data are clocked in and out of the interface chip by a 1 MHz clock signal from the processor. Read and write functions are determined by two signals from Gate Array A. Three address bits applied to register-select inputs RS0-RS2 select the proper register in the interface chip.

5-28. REAR PANEL US/A4 SWITCH (Option 003)

5-29. This switch is used to program the plotting area for two paper sizes:

Switch Position	Maximum Plotting Area
US	7.5 × 10.2 in.
A4	190 × 273mm

5-30. PROCESSOR

5-31. The 6802 microprocessor used in the 7470A has 128 eight-bit bytes of Random Access Memory (RAM).

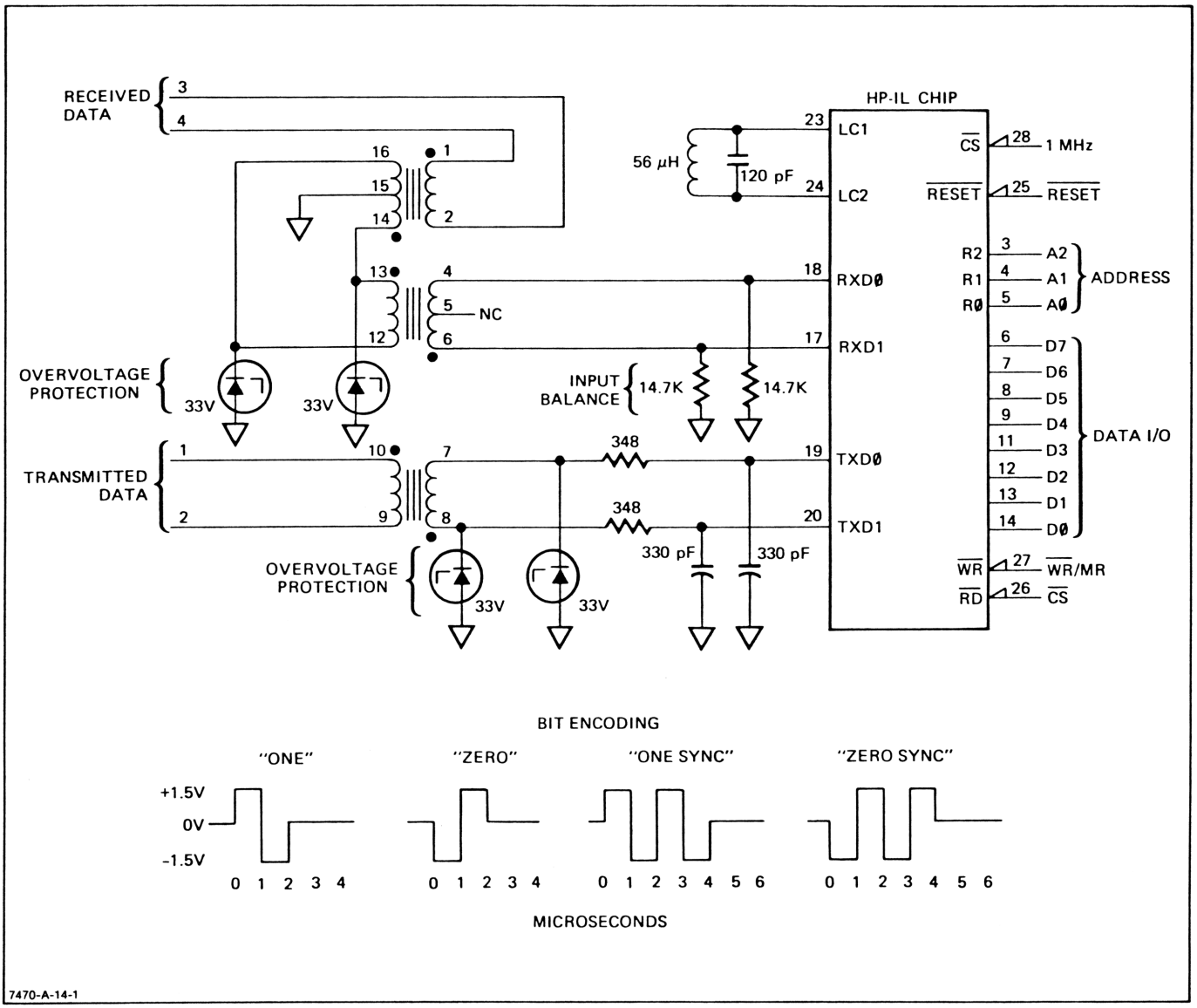

Figure 5-2. HP-IL Interface Circuits

An internal clock circuit is controlled by an external 4 MHz crystal. In addition to 4 MHz, the clock circuit has a 1 MHz output which is used to clock several other ICs.

5-32. ADDRESS. The processor outputs a 16-bit address. A high VMA (Valid Memory Address) output indicates that the address is valid.

5-33. RESET. An external RC circuit provides a reset pulse to the processor and other circuits at the time power is switched on.

5-34. READ ONLY MEMORY

5-35. The Read Only Memory (ROM) contains the fixed routines required for plotter operation. Each ROM is enabled by a signal from Gate Array A. Because the parallel data outputs are three-state, they are effectively disconnected from the data bus while the ROM is not enabled.

5-36. RANDOM ACCESS MEMORY

5-37. The Random Access Memory (RAM) provides storage for current plotter instructions. Each RAM is enabled by a signal from Gate Array A, and directed to read or write by the Read/$\overline{\text{Write}}$ (R/$\overline{\text{W}}$) signal from the processor. Data bytes are clocked in and out of the RAM by the 1 MHz signal from the processor.

5-38. GATE ARRAYS A AND B

5-39. The gate arrays perform a number of operations, some of which can best be explained with the operation of other circuits to be described later. Chip select signals and the Option 001 baud rate clock are developed in the gate arrays. The front panel switches are sensed through Gate Array B.

5-40. MOTOR SUPPLY VOLTAGE COMPARATOR

5-41. The power supply for the X and Y motors is unregulated. A comparator senses the actual voltage at

intervals of approximately five seconds, and the resulting digital information is used to regulate power through the motor drive circuits.

5-42. A divider places one-tenth of the power supply voltage at the non-inverting input to the comparator. Pulses of known value from Gate Array B are applied to an integrating capacitor at the inverting input to the comparator. The pulse width is increased until the comparator output inverts. This pulse width information is used by the processor to regulate power to the motor drive circuits.

5-43. MOTOR SERVO SYSTEMS

5-44. The servo systems for the X and Y motors are identical. In each system, the reversible motor is driven by pulses applied through one of two emitter-follower drivers, depending on the desired direction of rotation. The pulse rate determines the speed of rotation, and the number of pulses controls the amount of rotation, determining the distance traveled by the paper or pen.

5-45. If plotter action is to be consistent and predictable, it is essential to control the amount of power applied to the motor by each pulse. The pulse amplitude depends upon the actual voltage output of the motor drive power supply. The pulse width is modified to compensate for pulse amplitude so that the pulse represents the proper amount of power.

5-46. Figure 5-3 is a block diagram of a motor servo system. Plot increment (plot in a positive direction) and decrement instructions are sent by the processor through the gate array to the servo chip. The motor drive pulses are stretched to the proper width in the digital gain adjust circuit in the gate array. The servo condition circuit (also in the gate array) then passes the pulses on to the motor drivers through either the $\overline{XA}$ or $\overline{XC}$ line, depending on the direction of rotation indicated by the sign voltage from the servo chip. The optical encoder on the motor feeds back to the servo chip the actual motor rotation data.

5-47. MOTOR CURRENT SENSOR

5-48. All the motor drive current passes through a 0.1 Ω resistor. The resulting voltage developed across this resistor is applied to the inverting input of a comparator amplifier. The other input to the amplifier is fixed at approximately +0.315 V. Consequently, if motor current reaches about 3.15 A, the comparator output changes from high to low, indicating excessive motor drive current.

5-49. PEN DOWN CIRCUIT

5-50. When the processor receives a pen down instruction, a 15.6 kHz pulse signal is issued to the pen down driver. Because more power is required to activate the pen solenoid than is needed to hold it after activation, the pulse is widened for a short period of time to provide this extra power. An air damper slows the descent of the pen to protect the pen tip.

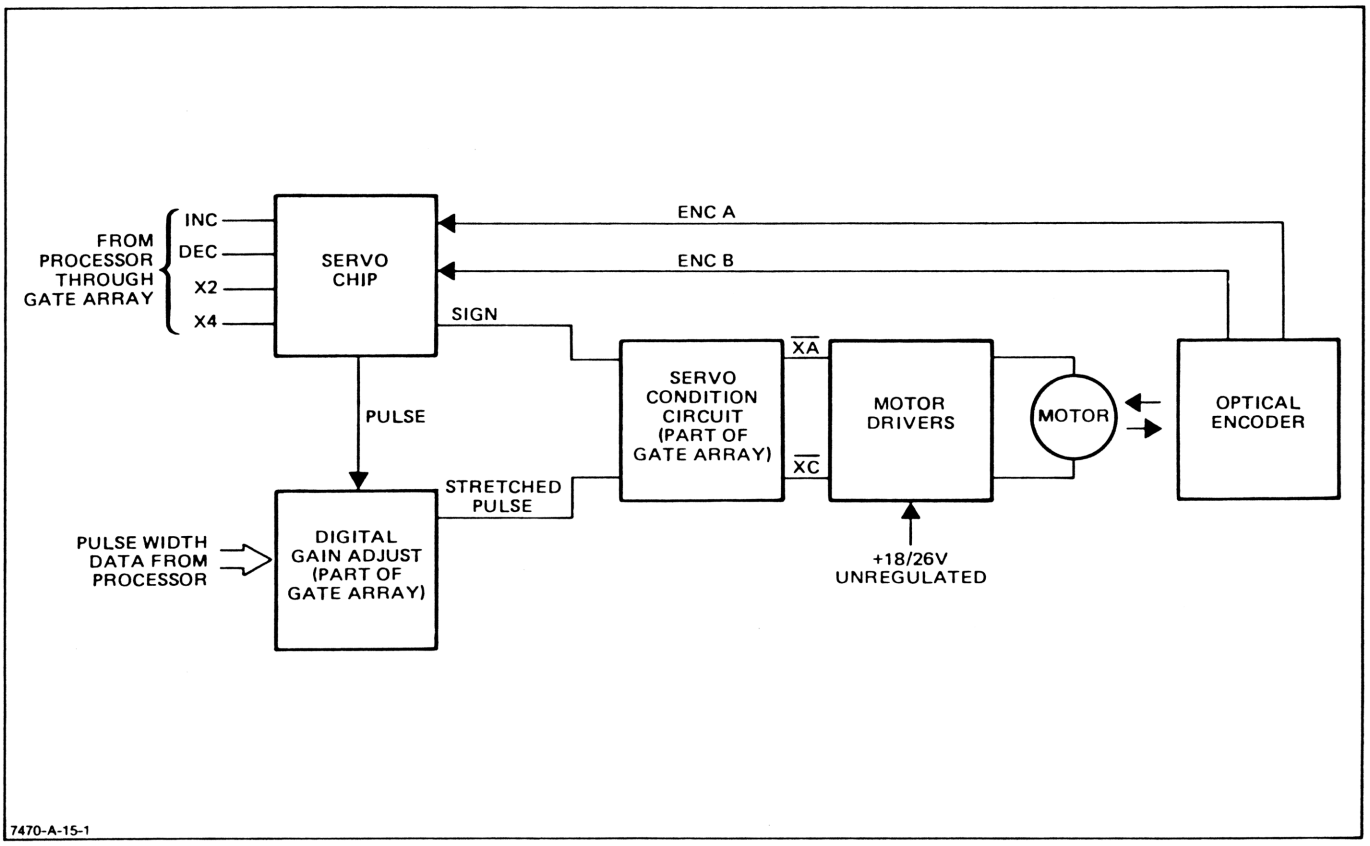

Figure 5-3. Servo System Block Diagram

5-51. PARTS REMOVAL AND REPLACEMENT

NOTE

All screws in the 7470A are metric sizes except the No. 3 self-tapping screws in the pen stables and bearing clamps.

5-52. TOP CASE

a. Set the LINE switch of OFF (O) and disconnect the power cord.

b. Remove the screws at the rear of the plotter, indicated in Figure 5-4.

c. Lift the rear of the top case, then the front will release from the base.

NOTE

When replacing the top case, make sure the PAPER LOAD/HOLD lever extends through the case and the tabs inside the front align properly above and below the base plate.

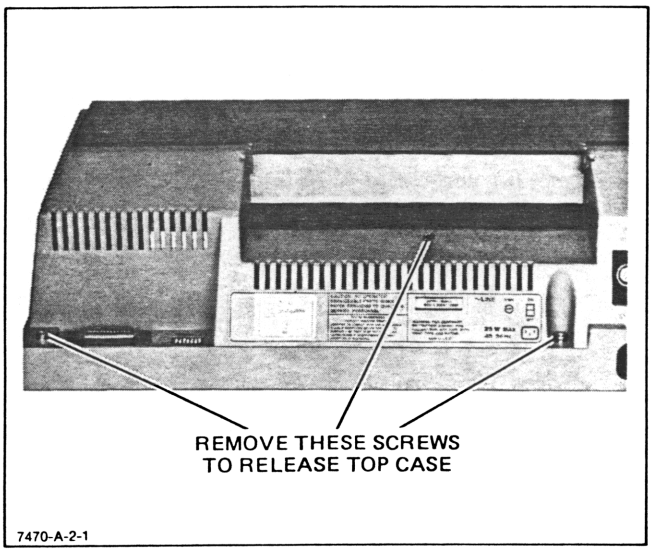

Figure 5-4. Top Case Removal

5-53. PAPER DRIVE MOTOR ASSEMBLY (Figure 5-5)

a. Remove the top case (see Paragraph 5-52).

CAUTION

Do not remove the encoder printed circuit assembly or the drive coupler from the motor. The entire unit must be assembled and calibrated at the factory.

b. Disconnect the paper drive motor cable (twisted pair) and the flat encoder cable from the main printed circuit assembly (see Figure 5-5A.)

c. Loosen the motor clamp and remove the motor from its mounting (see Figure 5-5B).

d. When replacing the motor, make sure the coupler on the motor shaft, the coupler ring, and the drive shaft coupler mesh properly, and the boss (key) on the under side of the motor casting fits into the corresponding hole in the chassis.

e. Make sure the pen carriage slider rod is all the way to the left, then replace the motor clamp. The arm on the clamp should hold the slider rod to the left. Tighten the clamp screw securely.

f. Loosen the clamping screw in the paper drive shaft coupler just enough to allow the coupler to slide on the shaft. Make sure the nut remains in the coupler.

g. Hold the drive shaft to the left by pushing (with a finger) on the left grit wheel, and push the drive shaft coupler to the right (with another finger) so that the coupler parts fit together snugly without bending the coupler pins. Tighten the shaft coupler clamping screw securely.

h. Route the motor drive cable so that it cannot interfere with the pen solenoid. Route the encoder cable inside the PCA so that it cannot contact the top case. Connect the cables to the PCA. E-E

5-54. PEN SOLENOID (Figure 5-5)

a. Remove the top case (see Paragraph 5-52).

b. Loosen the paper drive motor clamp enough to slide the motor to the right about 2 cm (3/4 in.). (Lift the right end of the motor slightly to release the motor from the chassis.)

c. Disconnect the solenoid cable from the printed circuit assembly.

d. Loosen the solenoid mounting screw enough to allow removal and replacement of the solenoid.

e. When replacing the motor, make sure the coupler on the motor shaft, the coupler ring, and the drive shaft coupler mesh properly, and the boss (key) on the under side of the motor casting fits into the corresponding hole in the chassis.

f. Make sure the pen carriage slider rod is all the way to the left, then replace the motor clamp. The arm on the clamp should hold the slider rod to the left. Tighten the clamp screw securely.

g. Loosen the clamping screw in the paper drive shaft coupler just enough to allow the coupler to slide on the shaft. Make sure the nut remains in the coupler.

h. Hold the drive shaft to the left by pushing (with a finger) on the left grit wheel, and push the drive shaft coupler to the right (with another finger) so that the coupler parts fit together snugly without bending the coupler pins. Tighten the shaft coupler clamping screw securely.

5-55. PEN DRIVE MOTOR AND BELT

a. Remove the top case (see Paragraph 5-52).

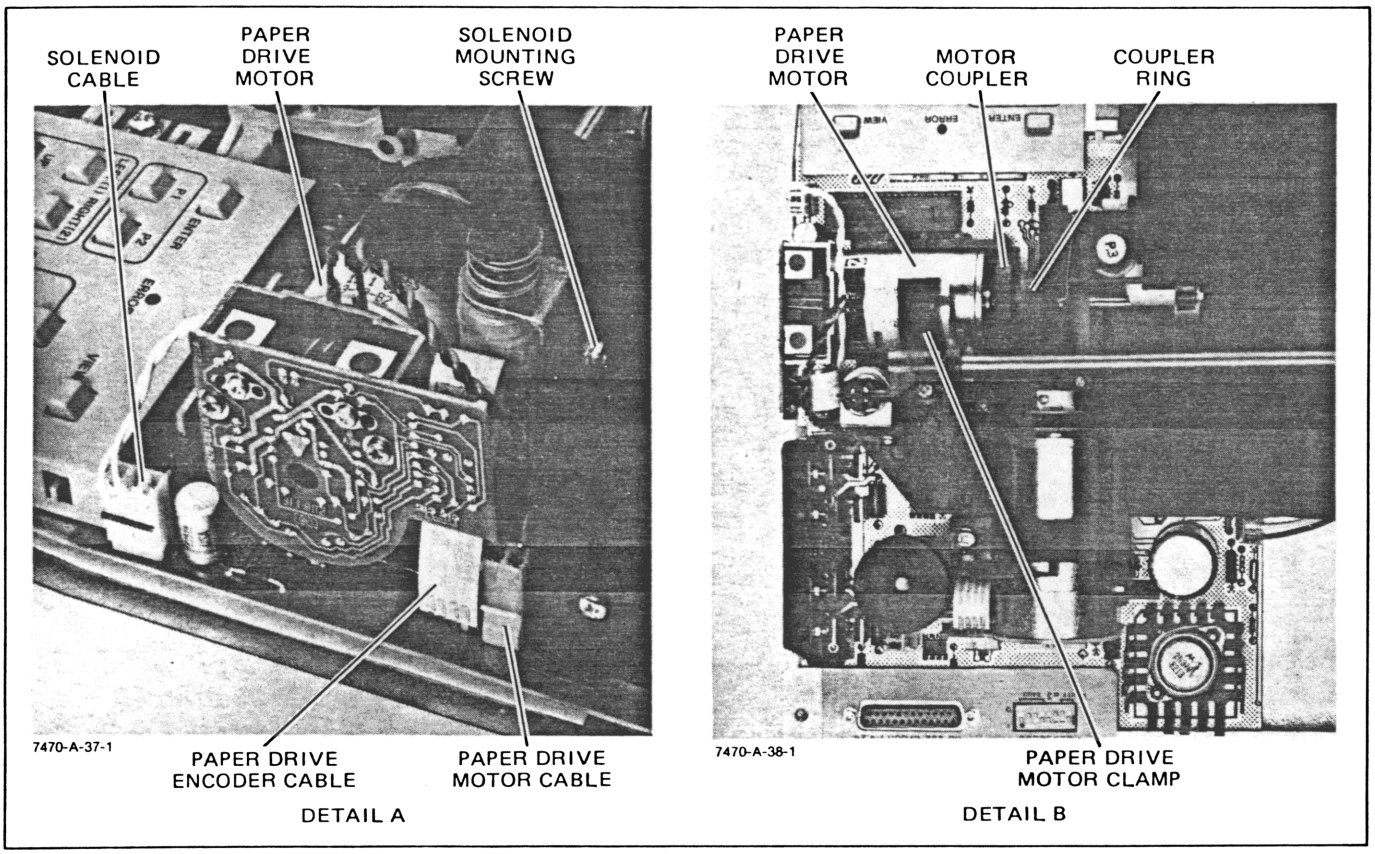

Figure 5-5. Paper Drive Motor and Pen Solenoid

CAUTION

Do not remove the encoder printed circuit assembly or drive pulley from the motor. The entire assembly must be assembled and calibrated at the factory.

b. Disconnect the pen drive motor cable (twisted pair) and the flat encoder cable from the main printed circuit assembly (see Figure 5-6A).

c. Remove the belt tensioner by pressing downward on the tensioner and sliding the tang at the bottom out of the slot in the chassis (see Figure 5-6B).

d. Loosen the pen drive motor clamp and remove the motor (see Figure 5-6A).

To remove the belt:

e. Slide the belt from the pen carriage (see Figure 5-6C).

f. Loosen the pen solenoid mounting screw (Figure 5-6A), slide the solenoid to the right, and remove the armature and spring.

g. Slide the pen lift bar (Figure 5-6A) to the right just far enough to allow removal of the belt.

To replace the belt and motor:

h. Place the belt in position and replace the pen lift bar.

i. Replace the solenoid spring and armature and secure the solenoid in place.

j. Slide the belt into the pen carriage (Figure 5-6C).

k. Place the idler pulley in position.

l. Slide the pen drive motor into place and tighten the clamp. (A boss on the side of the motor casting must fit into a notch in the chassis.)

m. Place the belt over the drive pulley.

n. Replace the belt tensioner and spring. Move the pen carriage from side to side and make sure the belt and pulleys are properly aligned.

o. Connect the motor and encoder cables to the main printed circuit assembly. Route the encoder cable in front of the PCA so that it cannot contact the top case. E

p. Replace the top case, making sure the PAPER LOAD/HOLD lever extends through the case and the tabs inside the front of the case align properly above and below the base plate.

E

DETAIL A

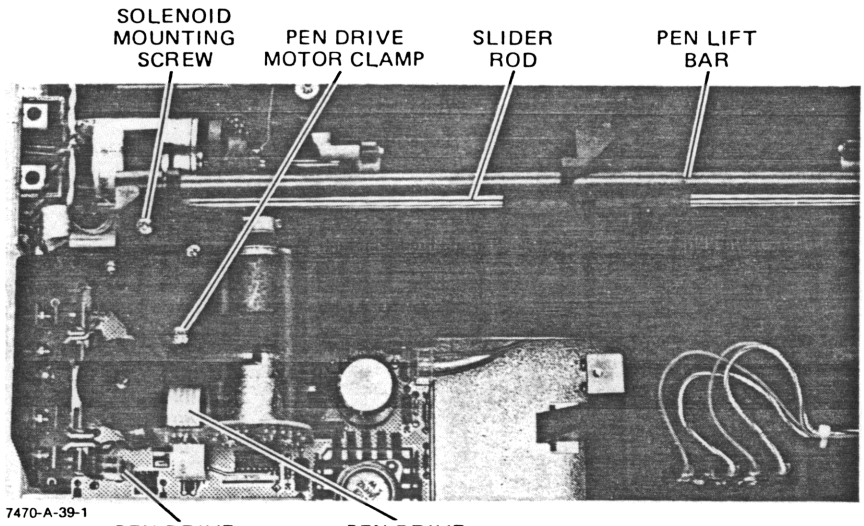

E

DETAIL B

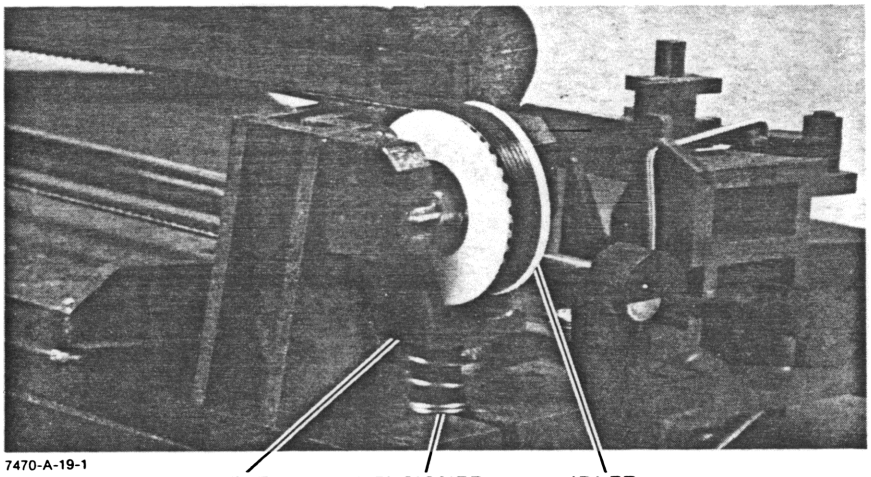

DETAIL C

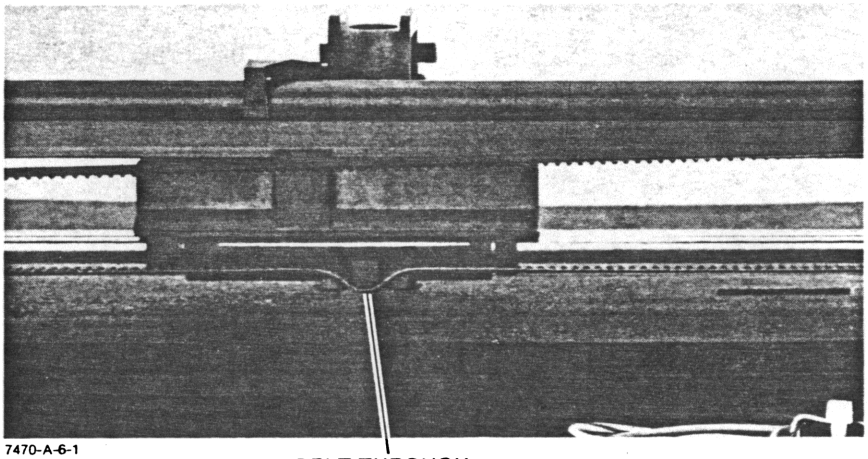

Figure 5-6. Pen Drive

5-56. PEN CARRIAGE, PEN HOLDER, AND DAMPER

a. Remove the top case (see Paragraph 5-52).

b. Remove the paper drive motor as instructed in Paragraph 5-53.

c. Remove the pen solenoid as instructed in Paragraph 5-54.

d. Remove the pen drive motor as instructed in Paragraph 5-55 steps b., c., and d.

e. Slide the belt from the pen carriage (see Figure 5-6C) and move the pen carriage to the left.

CAUTION

Two springs will be released during the next two steps — the pen down spring and a pre-load spring on the slider rod between the carriage and pen holder parts. Proceed carefully.

f. Slide the pen lift bar (see Figure 5-6A) to the right and out of the carriage assembly. (If it is necessary to replace the end cap on the lift bar, this cap merely slides onto the bar.)

g. Move the slider rod (Figure 5-6A) to the right just far enough to release the left end of the rod from its mounting. Slide the rod to the left and out of the carriage/pen holder assembly.

h. The plastic damper is merely pressed into the carriage and pen holder parts. Remove carefully.

To remove the pen grip arms:

i. Remove the continous spring, noting that it is routed through two channels on the inner side of the pen holder.

j. The left pen grip arm snaps onto the pivot on the left side, and the right arm snaps onto the pivot on the right side. Remove carefully if required.

To reassemble:

k. Replace the pen grip arm(s) and continuous spring. Make sure the spring is routed properly in the channels. The point in the spring where the ends are connected together should be centered in a groove, not in the active part of the spring.

l. Carefully replace the damper.

m. Place the pen down and pre-load springs into position and hold the parts together while inserting the slider rod from the left. Make sure the pre-load spring is positioned over the rod properly so that it does not drag on the slider rod.

n. Replace the slider rod in the chassis.

o. Replace the pen lift bar.

p. Replace the pen solenoid.

q. Replace the paper drive motor, making sure the coupler on the motor shaft, the coupler ring, and the drive shaft coupler mesh properly, and the boss (key) on the under side of the motor casting fits into the corresponding hole in the chassis.

r. Make sure the pen carriage slider rod is all the way to the left, then replace the motor clamp. The arm on the clamp should hold the slider rod to the left. Tighten the clamp screw securely.

s. Loosen the clamping screw in the paper drive shaft coupler just enough to allow the coupler to slide on the shaft. Make sure the nut remains in the coupler.

t. Hold the drive shaft to the left by pushing (with a finger) on the left grit wheel, and push the drive shaft coupler to the right (with another finger) so that the coupler parts fit together snugly without bending the coupler pins. Tighten the shaft coupler clamping screw securely.

u. Route the motor drive cable so that it cannot interfere with the pen solenoid. Route the encoder cable inside the PCA so that it cannot contact the top case. Connect the cables to the PCA. E | E

v. Replace the pen drive motor and belt as instructed in Paragraph 5-55 steps j. through o. Route the encoder cable in front of the PCA so that it cannot contact the top case. E | E

w. Replace the top case, making sure the PAPER LOAD/HOLD lever extends through the case and the tabs inside the front of the case are aligned properly above and below the base plate.

5-57. PEN STABLES

a. Remove the top case (see Paragraph 5-52).

b. Remove the screw securing the stable assembly to the chassis. Each stable is secured by one self-tapping screw (see Figure 5-7).

c. Remove the continuous spring, noting that it is routed through a notch in the pen grip pawl and a channel in the under side of the capper.

d. Reassemble in reverse order. Make sure the point in the spring where the ends are connected together is not bent over the pawl.

5-58. PINCH ROLLERS

a. Remove the top case (see Paragraph 5-52).

b. Remove the retaining ring that secures the pinch roller (see Figure 5-8).

c. Remove the pinch roller.

d. Replace the pinch roller. The large diameter end of the pinch roller must be toward the outer

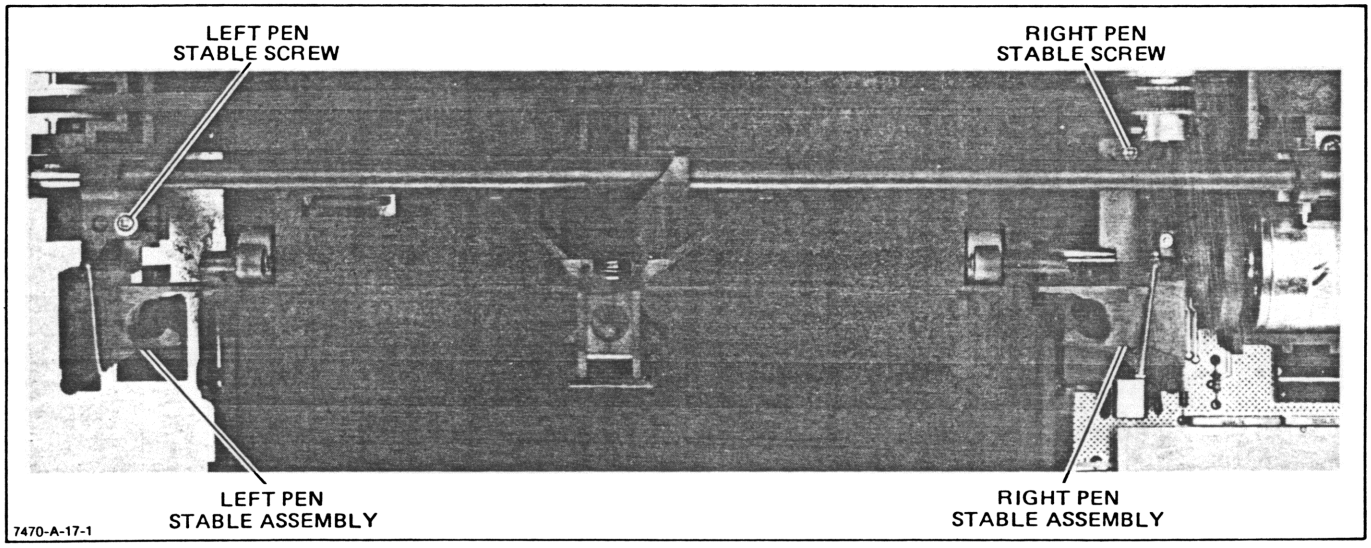

Figure 5-7. Pen Stables

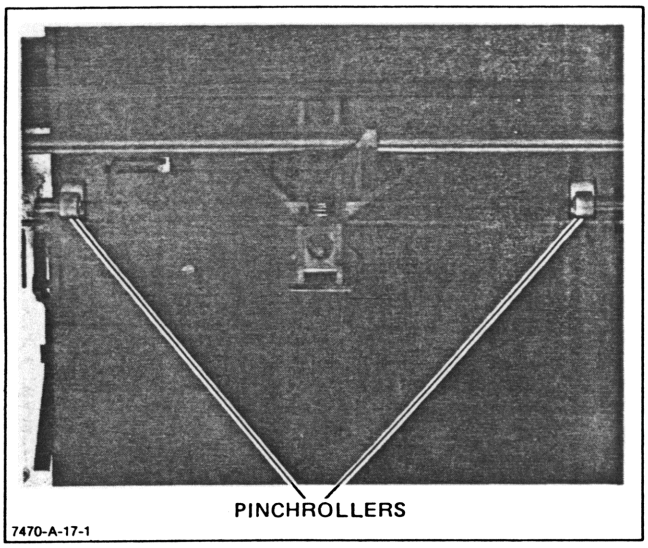

Figure 5-8. Pinch Rollers

edge of the plotting surface. This is necessary to keep the plotting media in place.

e. Replace the retaining ring.

f. Replace the top case, making sure the PAPER LOAD/HOLD lever extends through the case and the tabs inside the front of the case are aligned properly above and below the base plate.

5-59. PRINTED CIRCUIT ASSEMBLY

a. Remove the top case (see Paragraph 5-52).

b. Disconnect all cables from the printed circuit assembly.

c. Remove the screw holding the front panel, and remove the panel (see Figure 5-9).

d. Remove the recessed screw between the pen solenoid and the pen drive motor (see Figure 5-9).

e. Lift the right side of the chassis assembly. Tabs on the left side will release from the base plate.

f. Remove the screws or studs holding the rear panel interface connector.

g. Lift the front end of the printed circuit assembly and remove from the base plate.

h. Reassemble in reverse order. When replacing the top case, make sure the PAPER LOAD/HOLD lever extends through the case and tabs inside the front are aligned properly above and below the base plate.

5-60. PINCH ROLLER MECHANISM AND PAPER DRIVE SHAFT

a. Remove the chassis assembly as instructed in Paragraph 5-59 steps a. through e.

NOTE

In the following procedure, perform only the steps necessary to remove the defective part(s). Both pinch roller arms must be removed in order to remove the paper drive shaft.

Left pinch roller arm:

b. Remove the left pen stable assembly (see Figure 5-7).

c. Remove the retaining ring and roller from the left pinch roller arm.

d. Place the chassis assembly upside down on the work surface (see Figure 5-10).

e. Remove the left pinch roller spring.

f. Slide the left pinch roller arm from its pivot and remove from the chassis.

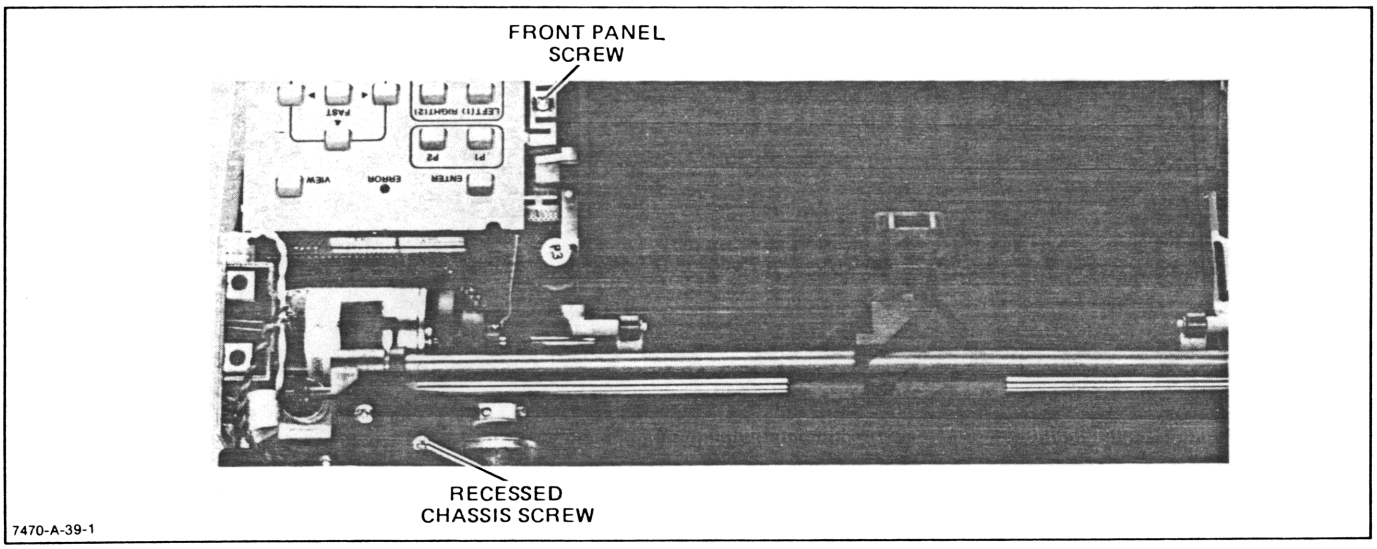

Figure 5-9. Chassis Assembly Removal

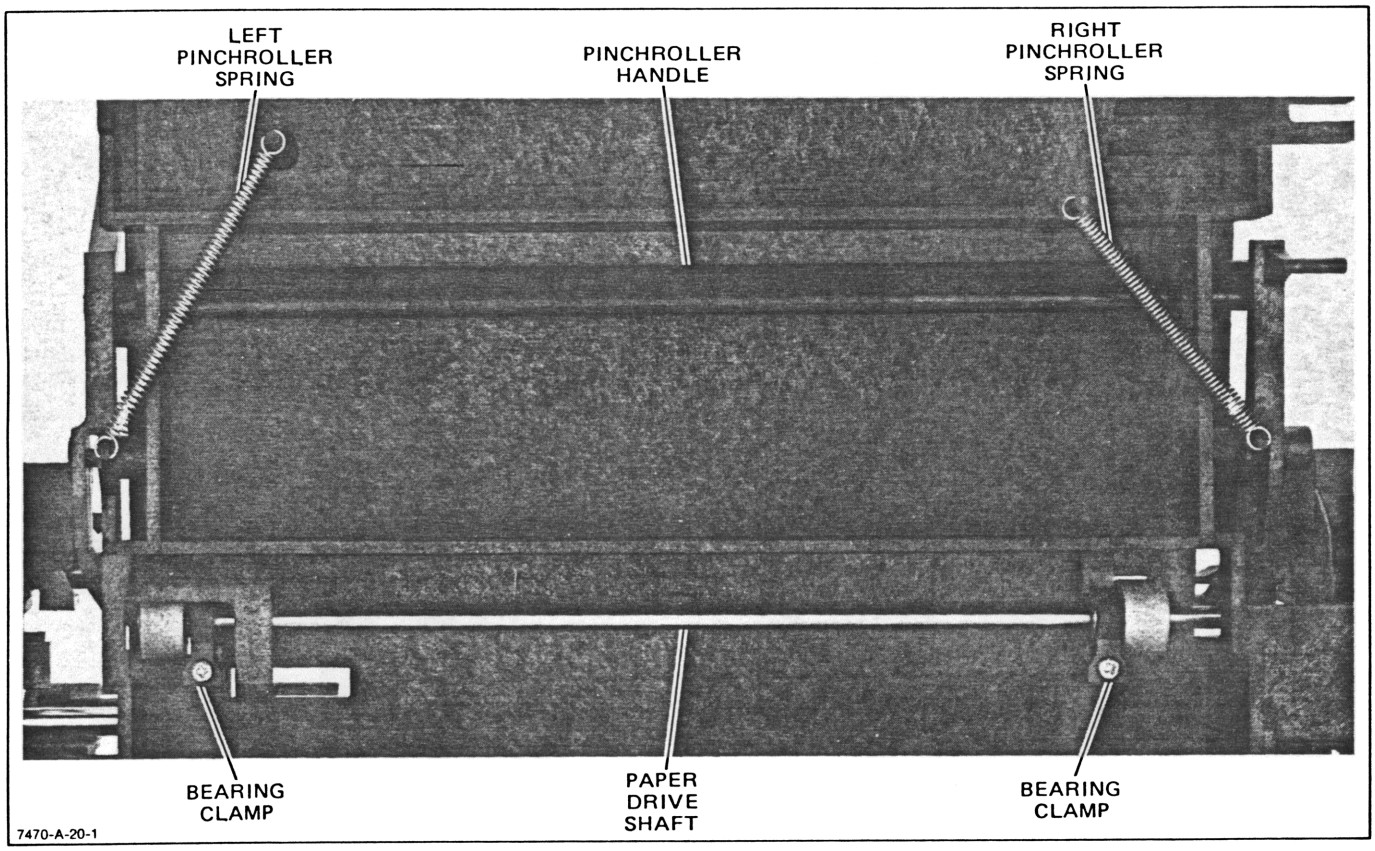

Figure 5-10. Under Side of Chassis Assembly

Right pinch roller arm:

g. Remove the right pinch roller spring.

h. Slide the right pinch roller arm from its pivot.

Paper drive shaft and coupler:

i. Remove both bearing clamps.

j. Remove paper drive shaft toward the left.

CAUTION

Do not attempt to replace grit wheels or bearings individually. The grit wheels must be press fitted at the factory to the proper position.

k. Loosen the coupler clamping screw and remove the coupler from the shaft.

l. When replacing the coupler and drive shaft, place the coupler on the end of the shaft, leaving the clamping screw loose enough to allow the coupler to slide.

m. Place the drive shaft in position, making sure the coupler parts mesh properly. Replace the bearing clamps and tighten securely.

n. Place the chassis assembly right side up.

NOTE

Setp o. assumes that the paper drive motor is in position and its clamp tightened securely. If not, refer to Paragraph 5-53.

o. Hold the drive shaft to the left by pushing (with a finger) on the left grit wheel, and push the drive shaft coupler to the right (with another finger) so that the coupler parts fit together snugly without bending the coupler pins. Tighten the shaft coupler clamping screw securely.

Pinch roller (PAPER LOAD/HOLD) lever and bar:

p. It is not necessary to remove pinch roller arms to remove the lever and bar. This part merely slips into position in the chassis.

q. Replace all parts in reverse order.

5-61. POWER MODULE AND TRANSFORMER

a. Remove the top case (see Paragraph 5-52).

NOTE

The transformer is held in place by the power module molding.

b. Remove the safety earth (ground) wire screw at the left end of the power module (see Figure 5-11A).

c. Disconnect the three-wire secondary power cable from the printed circuit assembly.

d. Disconnect the primary wires from the transformer.

e. Remove the screw in the power module (see Figure 5-11B).

f. Lift the left end of the module. The right end is held by a tab which fits into the base plate.

g. Replace in reverse order.

CAUTION

When connecting the transformer primary wires, refer to Section I, Line Voltage and Fuse Selection, for correct wiring.

WARNING

To protect against possible electrical shock, be sure to replace the safety earth (ground) wire and tighten the screw securely (see Figure 5-11A).

5-62. POWER MODULE WIRING

5-63. The power module is available as a pre-wired unit including the power input connector, switch, and fuse holder (less cap and fuse). The part number for this assembly is 07470-60195. This does not include the power transformer. It is recommended that if replacement of any part of the unit is required, the entire unit be replaced. However, if this is not possible and any part must be replaced separately, refer to Figure 5-12 for the correct wiring information.

5-64. RECOMMENDED TEST EQUIPMENT

5-65. Test equipment needed to maintain the 7470A is listed in Table 5-4. Models other than those listed

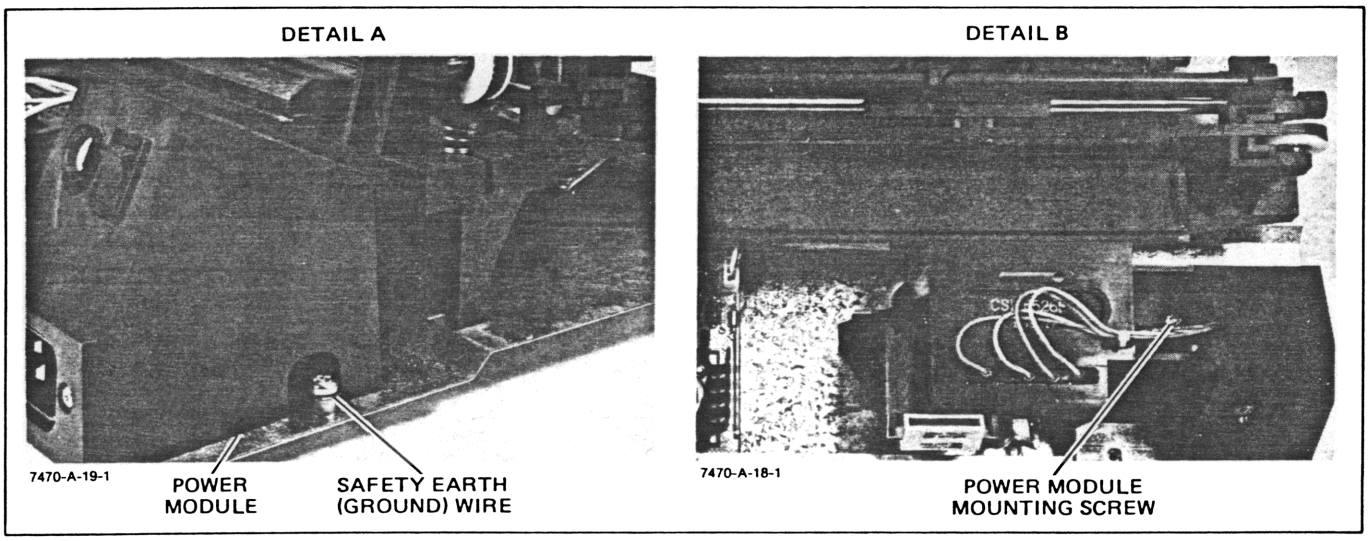

Figure 5-11. Power Module Removal

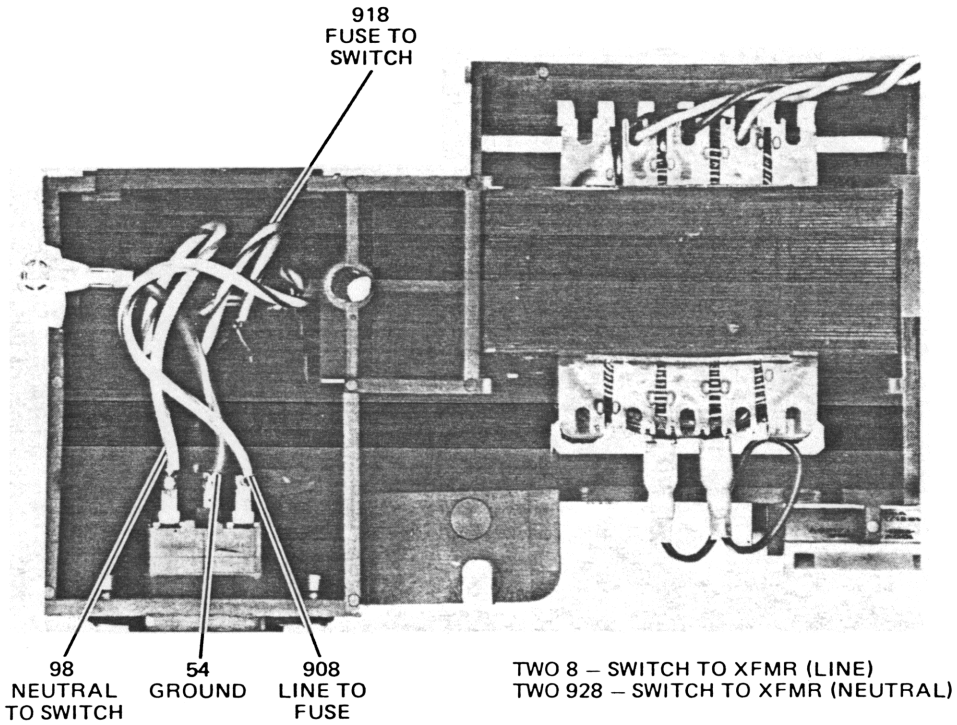

WIRE IDENTIFICATION IS BY COLOR CODE:

54 = GRN/YEL
8 = GRY
98 = WHT/GRY
908 = WHT/BLK/GRY
918 = WHT/BRN/GRY
928 = WHT/RED/GRY

7470-A-21-1

Figure 5-12. Power Module Wiring

may be used if their specifications equal or exceed those of the models listed.

Table 5-4. Recommended Test Equipment

TYPE	RECOMMENDED MODEL
Computer/controller	HP Model 85 Personal Computer with the appropriate interface: HP 82937A HP-IB Interface HP82939A Serial Interface HP 82938A HP-IL Interface
Digital Multimeter	HP 3465A
Oscilloscope	HP 1740A

5-66. TROUBLESHOOTING

5-67. If the plotter does not operate properly, make sure the Input/Output connector is seated correctly. If this is not the problem, remove the top case as instructed in Paragraph 5-52, and make sure all cables are secure in their connectors.

5-68. EXCHANGE PRINTED CIRCUIT ASSEMBLY

5-69. The printed circuit assembly is available on an exchange basis; that is, a factory-repaired and tested assembly may be ordered and the defective assembly returned for credit. Refer to Section III for ordering instructions and the exchange part number for your particular assembly. Because of the complexity of the circuits, it is recommended that you replace and return a defective printed circuit assembly to Hewlett-Packard rather than attempt repair.

5-70. DRIVE MOTORS AND PEN SOLENOID

5-71. The drive motor/encoder assemblies and the pen solenoid are not reparable. Motor and encoder cables are replaceable (see Figure 3-1 and Table 3-4 for part numbers).

WARNING

Maintenance described herein is performed with power supplied to the plotter and the top case removed. Such maintenance should be performed only by service-trained personnel who are aware of the hazards involved (for example, fire and electrical shock). Where maintenance can be performed without power applied, the line cord should be disconnected.

5-72. TROUBLESHOOTING TABLE

5-73. Table 5-5 lists trouble symptoms with possible causes and procedures.

5-74. TEST A

5-75. This test exercises:

Both motor drive circuits
Both motors and encoders
X and Y servo chips
Error light circuit
Gate arrays
Microprocessor
ROM

a. Load a sheet of paper.

b. Manually move the pen carriage near the center.

c. Hold the ENTER pushbutton down while setting the LINE switch to ON. The ERROR light should remain ON.

d. Press the ← cursor pushbutton.

1. ERROR light should turn ON and OFF continuously (approximately one second for each state).

2. Pen carriage should move left and right about 6.4 mm (0.25 in.) continuously.

3. Paper should move back and forth about 6.4 mm (0.25 in.) continuously.

NOTE

Test may be stopped by pressing ENTER and resumed by pressing ← . Plotter will not operate in any other mode until power has been turned OFF and ON.

5-76. TEST B (See Table 5-5)

5-77. This test helps to isolate problems to motors/encoders or logic circuits when a failure is accompanied by the ERROR light flashing ON/OFF at about one second per cycle. An oscilloscope is required. The interface cable should be disconnected from the plotter for this test.

a. Hold down each of the four cursor directional pushbuttons, one at a time. If a control stops the ERROR light from flashing (stays either ON or OFF while the button is held down) the failure is associated with one of the following general areas.

↑	—	X saturation line	Paper drive
↓	—	X error line	
←	—	Y saturation line	Pen drive
→	—	Y error line	

b. Remove the top case as instructed in Paragraph 5-52.

c. Connect the power cord. Hold the ENTER pushbutton down while setting the LINE switch to ON.

d. Press the ↓ pushbutton.

e. Disconnect (from the printed circuit assembly) the motor drive cable (twisted pair) indicated by the results of step a.

f. Use an oscilloscope to look at the drive signal at the connector. This should be a series of narrow pulses. If not, the problem is in the motor drive circuit, servo IC, gate array, or the microprocessor.

g. If the signal in step f. is correct, monitor the signal at pin 4 of the encoder cable (with the cable connected to the PCA) while rotating the motor manually. This should produce pulses varying with the speed of motor rotation. If not, the encoder is defective. Replace the motor/encoder assembly. If pulses are present, the problem is probably in the servo IC.

NOTE

Plotter will not operate in any other mode until power has been turned OFF and ON.

5-78. DIAGRAMS

5-79. Figure 5-13 explains symbols which may appear on the schematic diagrams, and Figure 5-14 illustrates logic symbols used. Figure 5-15 through 5-18 are schematic diagrams of the 7470A circuits.

Table 5-5. Troubleshooting

SYMPTOMS	POSSIBLE CAUSES/PROCEDURES
Does not respond to any front panel controls. ERROR light is OFF with PAPER lever in LOAD position.	Rear panel line fuse (see Table 1-3). Power supplies. Check voltages and power supply fuses on PCA. 4 MHz clock Gate Array B
Responds to front panel controls but not to external controller.	I/O connector not seated properly (may produce an error indication at controller). Test I/O circuits by sending: "SP1;SP2;JMP0" from controller.
Does not operate properly. ERROR light flashes (PAPER lever in HOLD) about 1 second per ON/OFF cycle.	Go to Test B, Paragraph 5-76.
Pen up/down does not operate.	Check fuse (A1F2) and pen supply voltage. Check solenoid continuity.
Paper slips while plotting.	Pinch roller worn. Replace both pinch rollers. Bearing clamp loose. Pinch roller arm spring loose or broken.
Diagonal lines not straight:	
Especially near horizontal (X-axis) lines	Y (pen drive) motor/encoder assembly.
Especially near vertical (Y-axis) lines	X (paper drive) motor/encoder assembly. Deposits on grit wheels, pinch rollers or slider rod. Clean slider rod and pinch with a dry wiper.

SCHEMATIC DIAGRAM NOTES

Resistance in ohms, capacitance in microfarads, inductance in millihenries unless otherwise noted.

* Asterisk denotes a factory-selected value. Value shown is typical. Part might be omitted.

Indicates a NOTE on the schematic diagram.

Tool-aided adjustment. Manual control.

Encloses a front-panel or circuit assembly silkscreened designator.

Encloses a rear-panel silkscreened designator.

Circuit assembly borderline.

Other assembly borderline. Also used to indicate mechanical interconnection (ganging) and RF shielding.

Heavy line with arrows indicates path and direction of main signal.

Heavy dashed line with arrows indicates path and direction of main feedback.

Indicates cable run with seven lines.

Wiper moves toward CW with clockwise rotation of control (as viewed from shaft or knob).

Numbered Test point. Measurement aid (metal post, circuit pad, etc.) provided.

Lettered Test point. No measurement aid provided.

( ) Encloses wire color code. Code used is the same as the resistor color code. First number identifies the base color, second number identifies the wider stripe, third number identifies the narrower stripe (e.g., (947) denotes white base, yellow wide stripe, violet narrow stripe).

A direct conducting connection to the earth, or a conducting connection to a structure that has a similar function (e.g., the frame of an air, sea, or land vehicle).

A conducting connection to a chassis or frame.

Common connections. All like-designated points are connected. When accompanied by a letter, indicates the type common (i.e., A = Analog, D = Digital, F = Floating).

1-A-1-2

Figure 5-13. Schematic Diagram Notes (Sheet 1 of 2)

SCHEMATIC DIAGRAM NOTES (Continued)

Light Emitting Diode (LED).

Photo-Transistor.

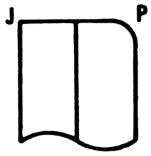

Cable and circuit assembly connectors.

J – Fixed Portion
P – Moveable Portion

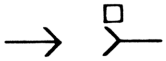

Circuit assembly square-pin connectors.

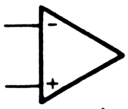

Operational Amplifier (integrated circuit).

Voltage regulator (breakdown diode).

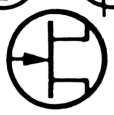

Denotes Field Effect transistor (FET) with N-type base.

Denotes FET with P-type base.

Denotes Silicon Controlled Rectifier (SCR).

Denotes spring-loaded switch.

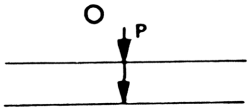

Indicates twisted pair.

Identifies service sheet for quick reference.

Signal line identification.

Combined service sheet and signal line identification.

1-A-2-1A

Figure 5-13. Schematic Diagram Notes (Sheet 2 of 2)

INDICATOR SYMBOLS

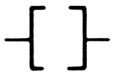

HIGH LEVEL SENSITIVE

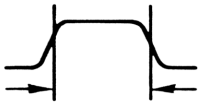

ACTIVE PERIOD

ACTIVE HIGH inputs and outputs are indicated by the absence of the polarity indicator (◺) or negation symbol (o).

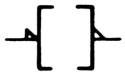

LOW LEVEL SENSITIVE

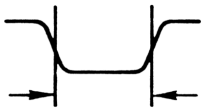

ACTIVE PERIOD

ACTIVE LOW inputs and outputs are indicated by the presence of the polarity indicator (◺) or negation symbol (o).

LOW TO HIGH EDGE SENSITIVE

ACTIVE PERIOD

HIGH TO LOW EDGE SENSITIVE

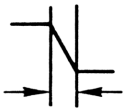

ACTIVE PERIOD

EDGE SENSITIVE (Dynamic) inputs are indicated by the presence of the dynamic indicator symbol (>).

OUTPUT DELAY

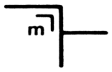

The output changes state only after the referenced input (m) returns to its inactive state. (m is replaced by appropriate dependency symbol.)

INHIBIT INPUT

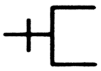

An active high state input prevents the output of that element from being active.

INHIBIT INPUT

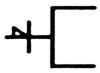

An active low state input prevents the output of that element from being active.

OPEN COLLECTOR OR EMITTER OUTPUT

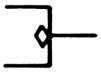

This output requires some external components to achieve logic state.

1-A-3-1

Figure 5-14. ANSI Y32.14 Logic Symbols (Sheet 1 of 6)

INDICATOR SYMBOLS (Continued)

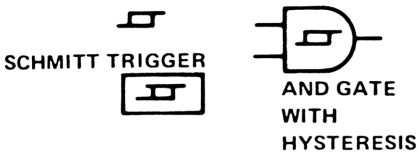

Schmitt Trigger-⊔ indicates that hysteresis exists in the device.

Dependency Notation

The input that controls or gates other inputs is labeled with a "C" or a "G", followed by an identifying number. The controlled or gated input or output is labeled with the same number. In this example, "1" is controlled by "G1".

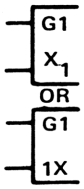

When the controlled or gated input or output already has a functional label (X is used here), that label will be prefixed or subscripted by the identifying number.

If a particular device has only one gating or control input then the identifying number may be eliminated and the relationship shown with a subscript.

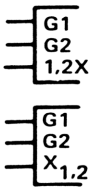

If the input or output is affected by more than one gate or control input, then the identifying numbers of each gate or control input will appear in the prefix or subscript, separated by commas. In this example "X" is controlled by "G1" and "G2".

GATE	IEEE STANDARD 91 ANSI Y32.14	TRUTH TABLE	FLIP FLOP	ANSI Y32.14 CONTROL DESIGNATIONS FOR F.F.	DESCRIPTION
AND	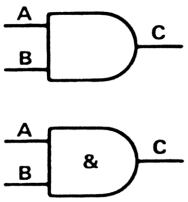	A B C L L L H H H L H L H L L	R-S	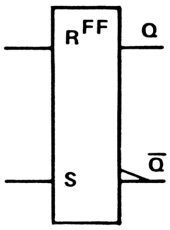	R S Q $\overline{Q}$ L L N/C N/C L H H L H L L H H H undetermined

1-A-4-1

Figure 5-14. ANSI Y32.14 Logic Symbols (Sheet 2 of 6)

INDICATOR SYMBOLS (Continued)

OR

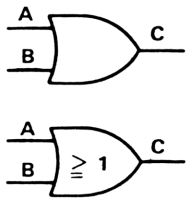

A	B	C
L	L	L
H	H	H
L	H	H
H	L	H

NAND

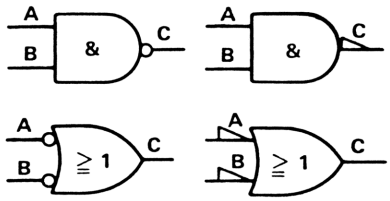

A	B	C
L	L	H
H	H	L
L	H	H
H	L	H

NOR

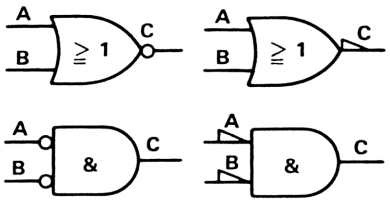

A	B	C
L	L	H
H	H	L
L	H	L
H	L	L

XOR

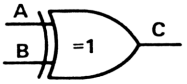

A	B	C
L	L	L
H	H	L
L	H	H
H	L	H

BUF-FER

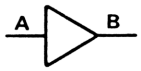

A	B
1	1
0	0

INVERT-ER

A	B
1	0
0	1

T

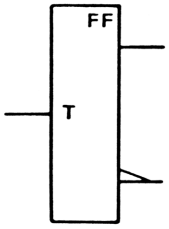

Toggles with every clock pulse

D

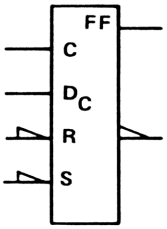

Data output follows data input. Input is gated by C.

J-K

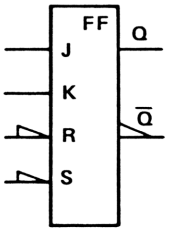

J	K	Q	Q̄
L	L	N/C	N/C
L	H	L	H
H	L	H	L
H	H	toggles	

J-K (gated)

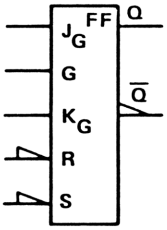

J and K inputs are gated by G.

J-K (master slave)

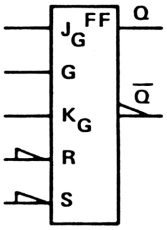

This output is dependent upon negative going edge of the signal.

S Set input — when active causes the flip-flop to set (Asynchronous)

R Reset input — when active causes the flip-flop to reset (Asynchronous)

N/C No Change

1-A-5-1

Figure 5-14. ANSI Y32.14 Logic Symbols (Sheet 3 of 6)

INDICATOR SYMBOLS (Continued)

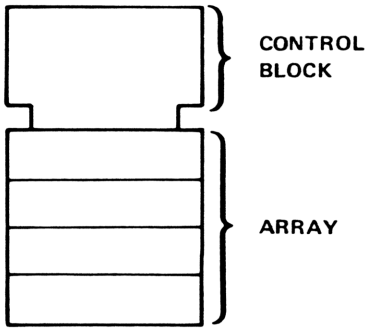

COMMON CONTROL BLOCK

The Control Block is used to show when common control signals are applied to a group of mechanically connected, but functionally separate units.

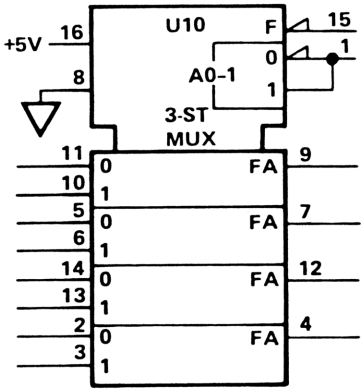

F input must be low to enable outputs. When F is high, outputs are high impedance. Address input determines whether 0 or 1 input will pass to output.

1-A-6-2

Figure 5-14. ANSI Y32.14 Logic Symbols (Sheet 4 of 6)

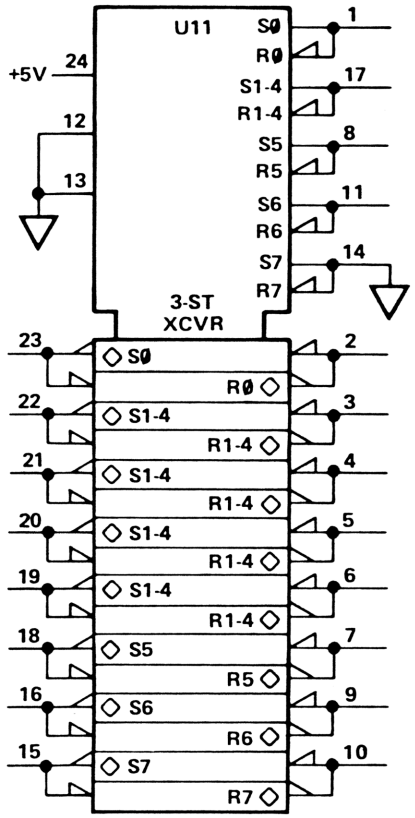

Level of inputs in control block (S/$\overline{R}$) determines direction of data flow.

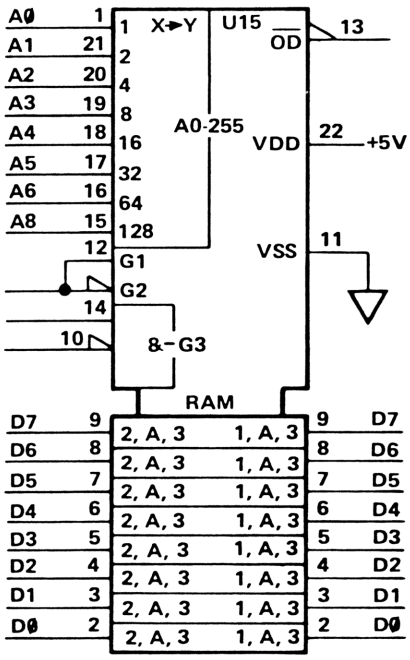

Random access memory with 256 addresses and 8-bit parallel inputs and outputs on the same pins. Each data location is selected by the 8-bit address in the upper left corner of the control block. The data input (write) function is enabled when gates G1/G2 are low and G3 is true (pin 14 high, pin 10 low). The read function when G1/G2 are high and G3 is true.

1-A-28-1

Figure 5-14. ANSI Y32.14 Logic Symbols (Sheet 5 of 6)

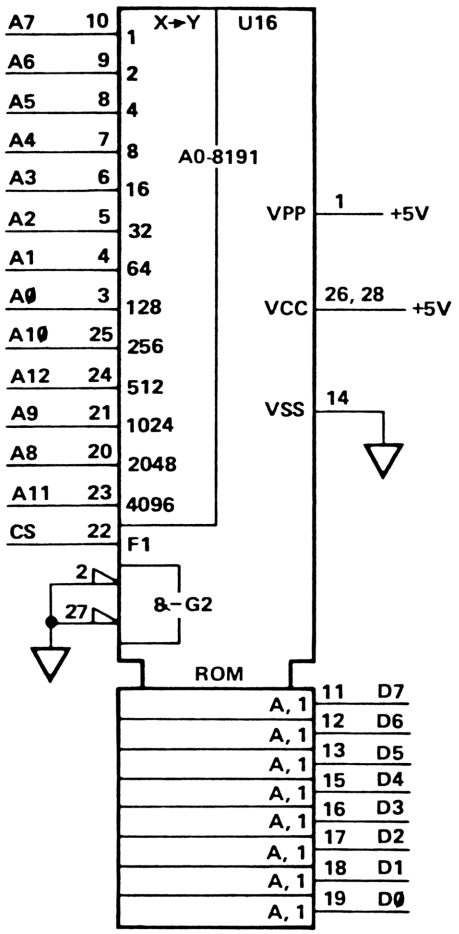

Read only memory with 8192 addresses and 8-bit parallel output. Each output byte is selected by the 12-bit address in the upper left corner of the control block. Output is enabled only when F1 is high and G2 is low.

1-A-27-1

Figure 5-14. ANSI Y32.14 Logic Symbols (Sheet 6 of 6)

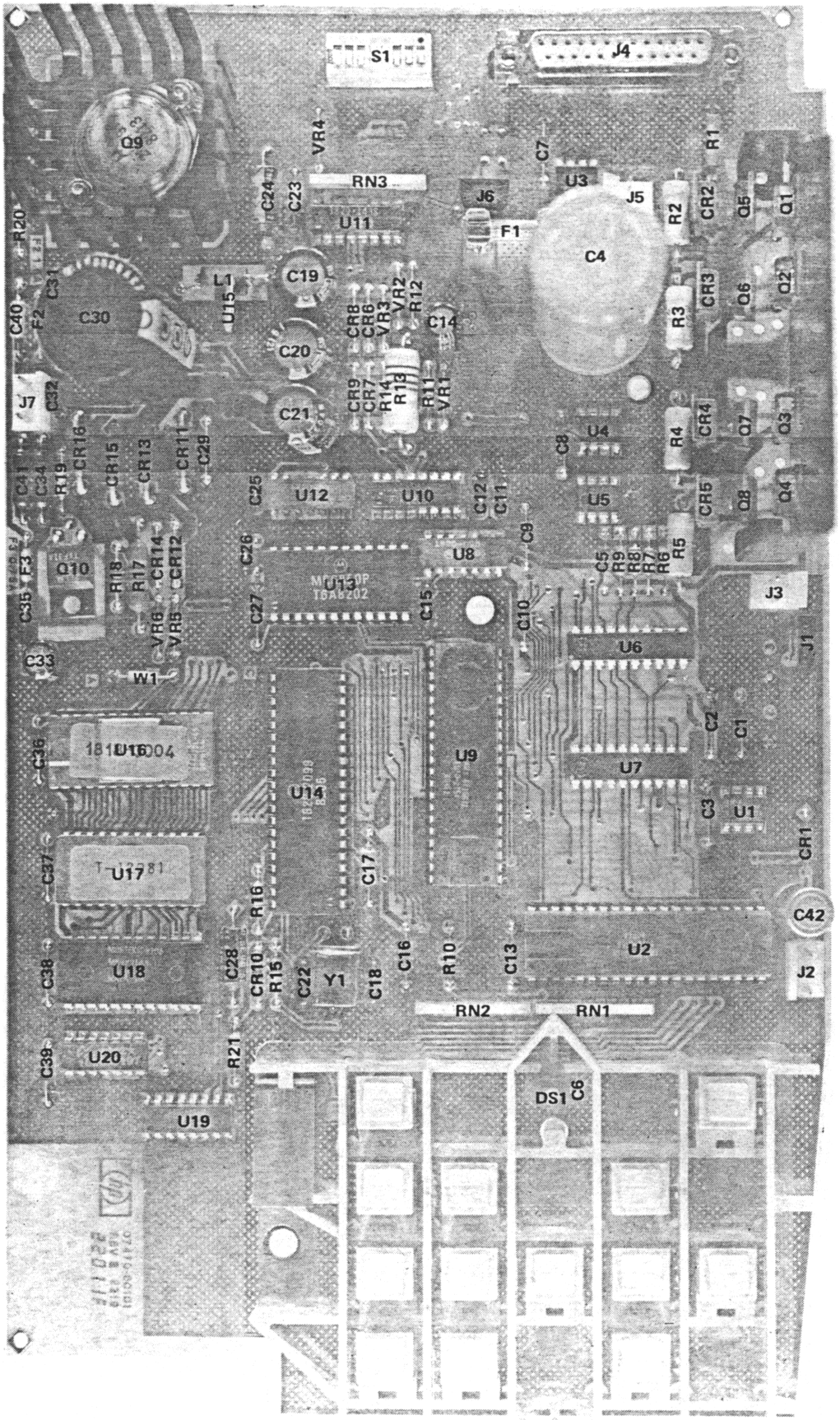
S1
J4
Q9
VR4
RN3
C7
U3
R1
C24
C23
J6
J5
R2
CR2
Q5
Q1
R20
U11
F1
C4
C31
L1
C19
CR8
CR6
VR3
VR2
R12
C14
R3
CR3
Q6
Q2
C40
F2
C30
U15
C20
CR9
CR7
R14
R13
R11
VR1
J7
C32
C21
U4
R4
CR4
Q7
Q3
C41
C34
R19
CR16
CR15
CR13
CR11
C29
C8
C25
U12
U10
C12
C11
U5
CR5
Q8
Q4
C35
F3
Q10
R18
R17
CR14
CR12
C26
U8
C9
C5
R9
R8
R7
R6
R5
J3
C27
U13
C15
C10
U6
J1
C33
W1
VR6
VR5
C36
U16
C2
C1
U9
U7
U14
C3
U1
C37
U17
C17
CR1
C42
R16
C38
U18
C28
CR10
R15
C22
Y1
C18
C16
R10
C13
U2
J2
RN2
RN1
C39
U20
R21
DS1
C6
U19

7470-A-43-1

PART OF A1 MAIN PCA 07470-60101(RS232-C/CCITT V.24 OPTION 001)

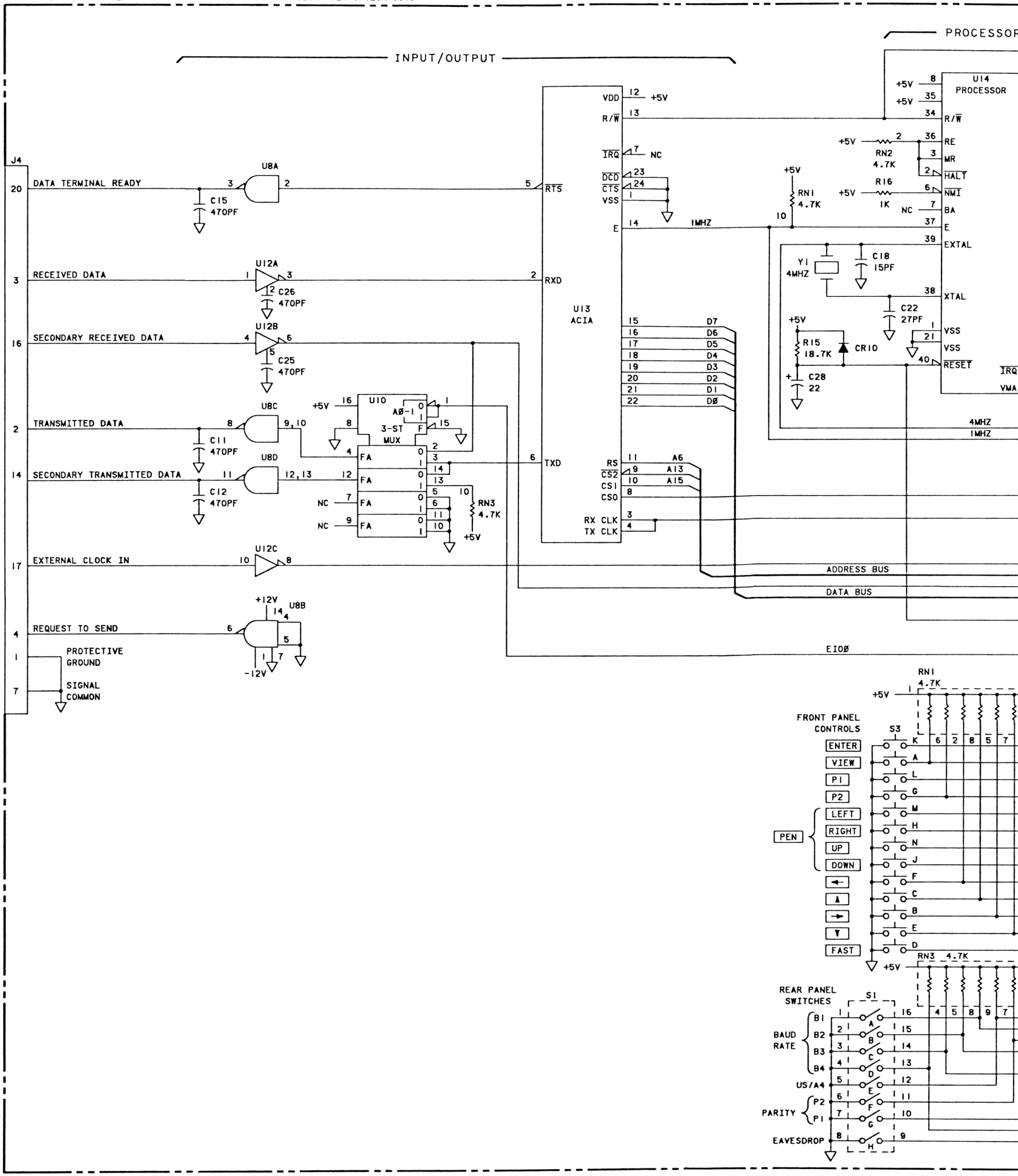

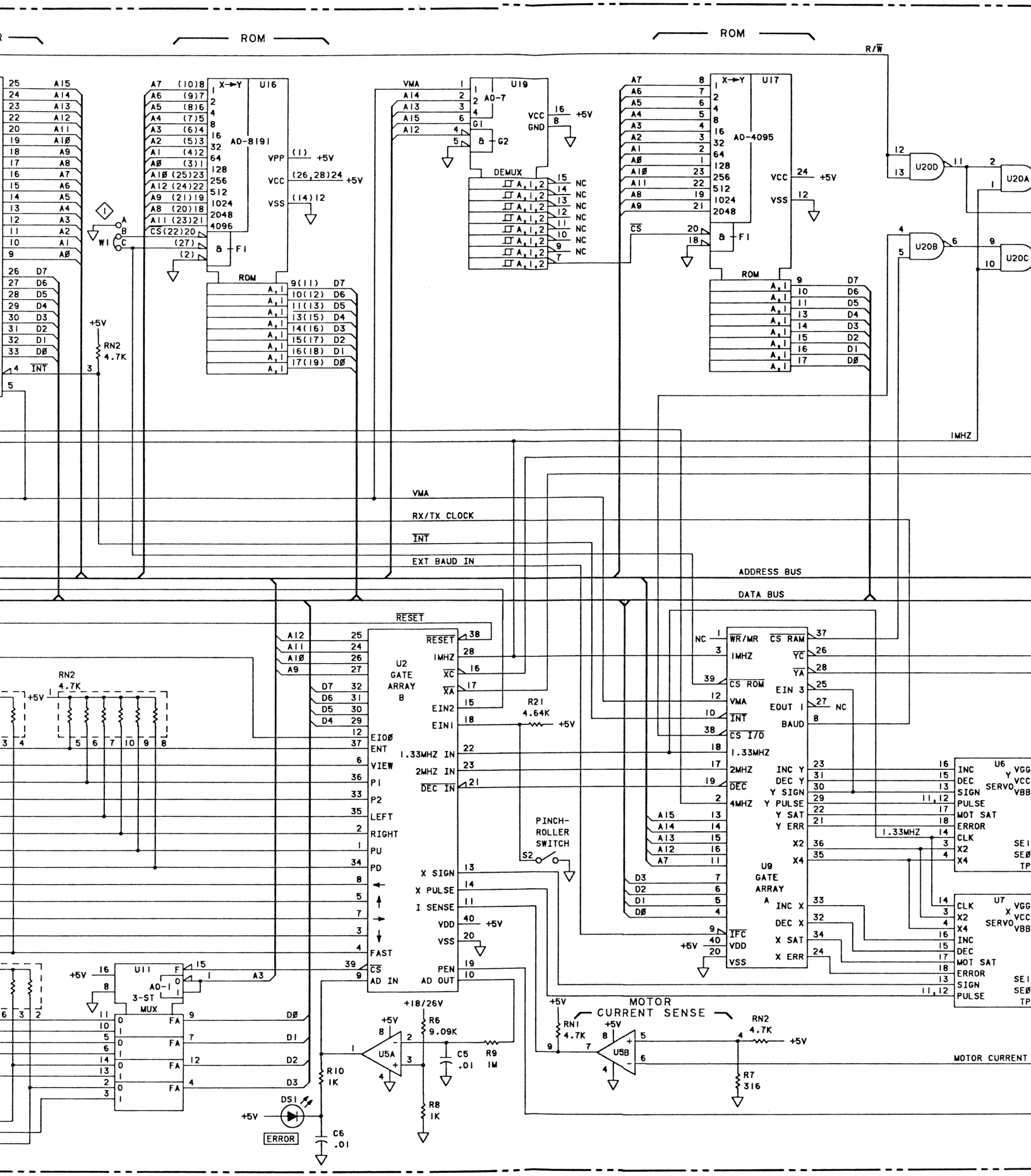
ROM
U16
AD-8191
U19
AD-7
DEMUX
U17
AD-4095
U20D
U20A
U20B
U20C
W1
RN2
4.7K
+5V
R/W
1MHZ
VMA
RX/TX CLOCK
INT
EXT BAUD IN
ADDRESS BUS
DATA BUS
RESET
U2
GATE
ARRAY
B
U9
GATE
ARRAY
A
U6
U7
SERVO
R21
4.64K
PINCH-
ROLLER
SWITCH
S2
U11
AD-1
3-ST
MUX
+18/26V
R6
9.09K
C5
.01
R9
1M
R10
1K
R8
1K
U5A
U5B
MOTOR
CURRENT SENSE
RN1
4.7K
R7
316
MOTOR CURRENT
DS1
ERROR
C6
.01

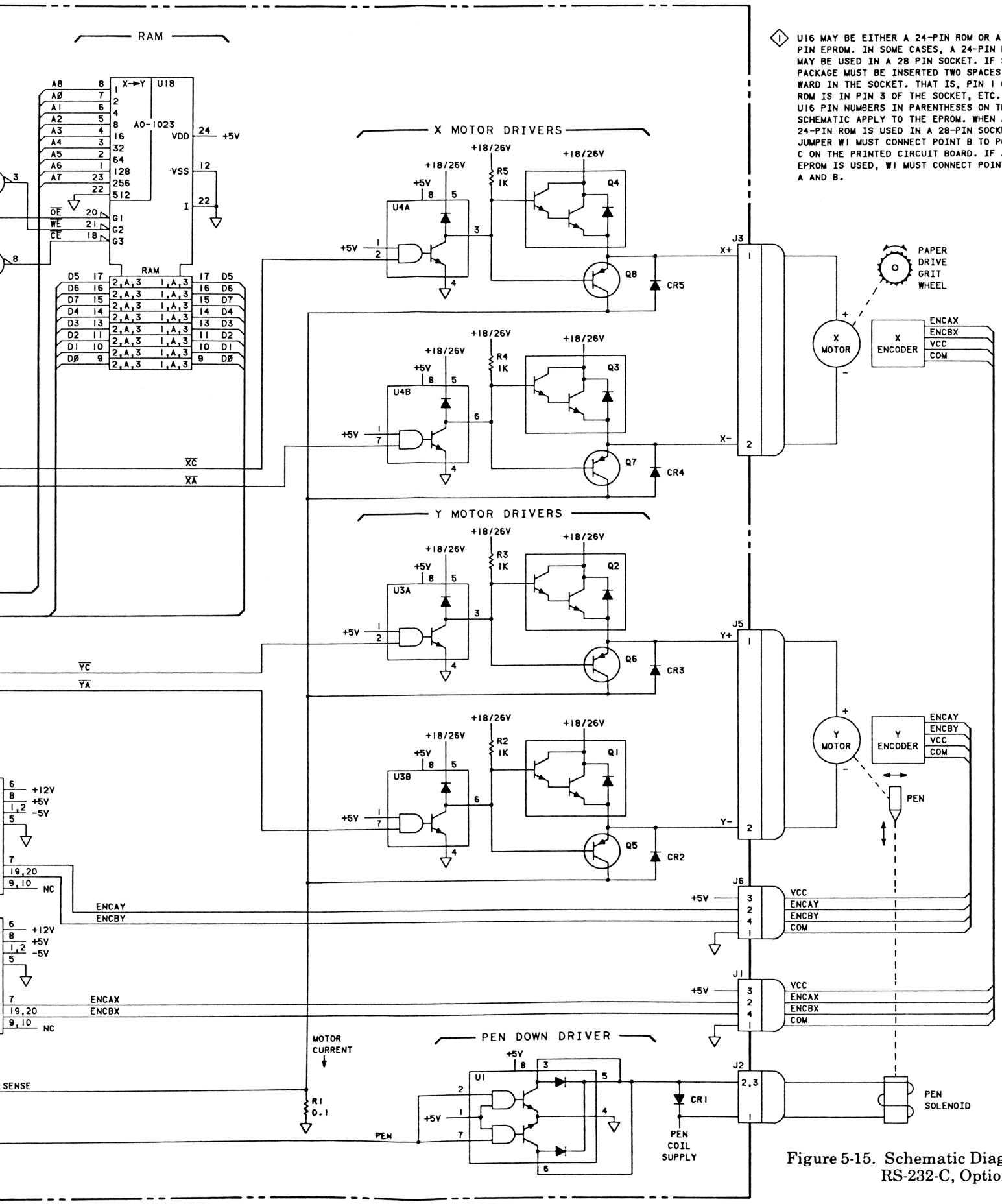

1 U16 MAY BE EITHER A 24-PIN ROM OR A 28-PIN EPROM. IN SOME CASES, A 24-PIN ROM MAY BE USED IN A 28 PIN SOCKET. IF SO, THE PACKAGE MUST BE INSERTED TWO SPACES DOWNWARD IN THE SOCKET. THAT IS, PIN 1 OF THE ROM IS IN PIN 3 OF THE SOCKET, ETC. THE U16 PIN NUMBERS IN PARENTHESES ON THE SCHEMATIC APPLY TO THE EPROM. WHEN A 24-PIN ROM IS USED IN A 28-PIN SOCKET, JUMPER W1 MUST CONNECT POINT B TO POINT C ON THE PRINTED CIRCUIT BOARD. IF A 28-PIN EPROM IS USED, W1 MUST CONNECT POINTS A AND B.

Figure 5-15. Schematic Diagram, RS-232-C, Option 001

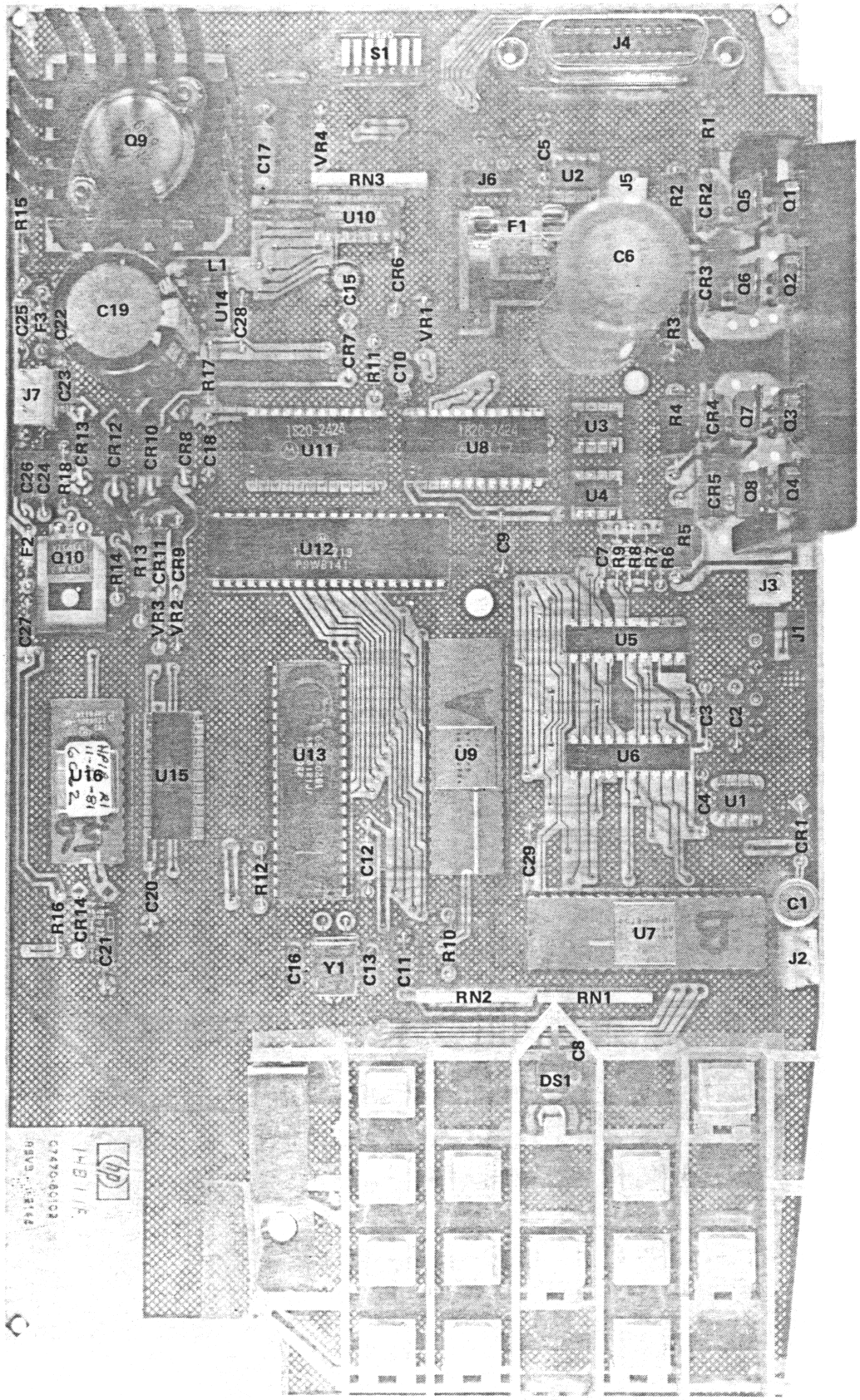

7470-A-23-1

OPTION 002
07470-60102

PART OF A1 MAIN PCA 07470-60102 (HP-IB OPTION 002)

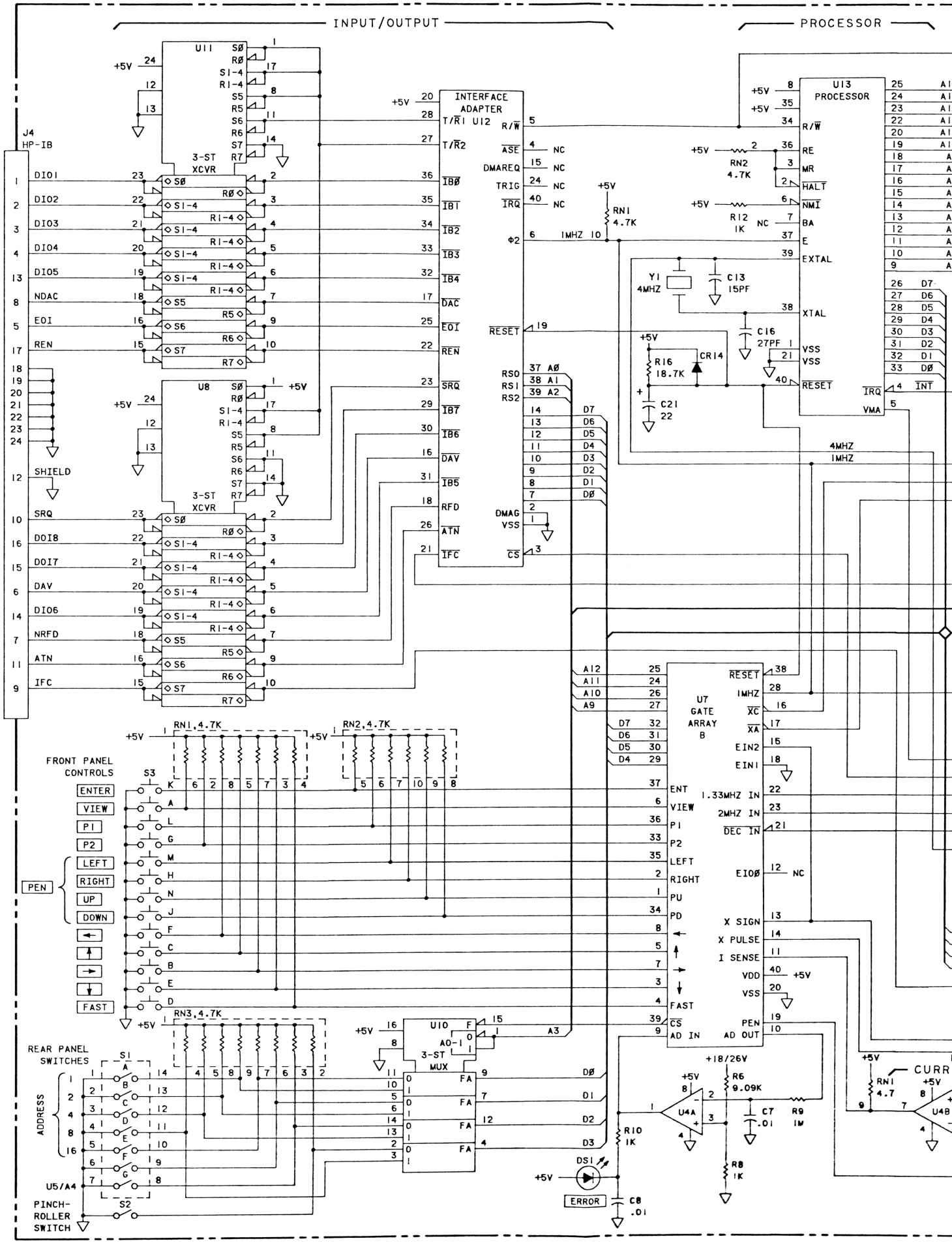

7470-J-26-1A

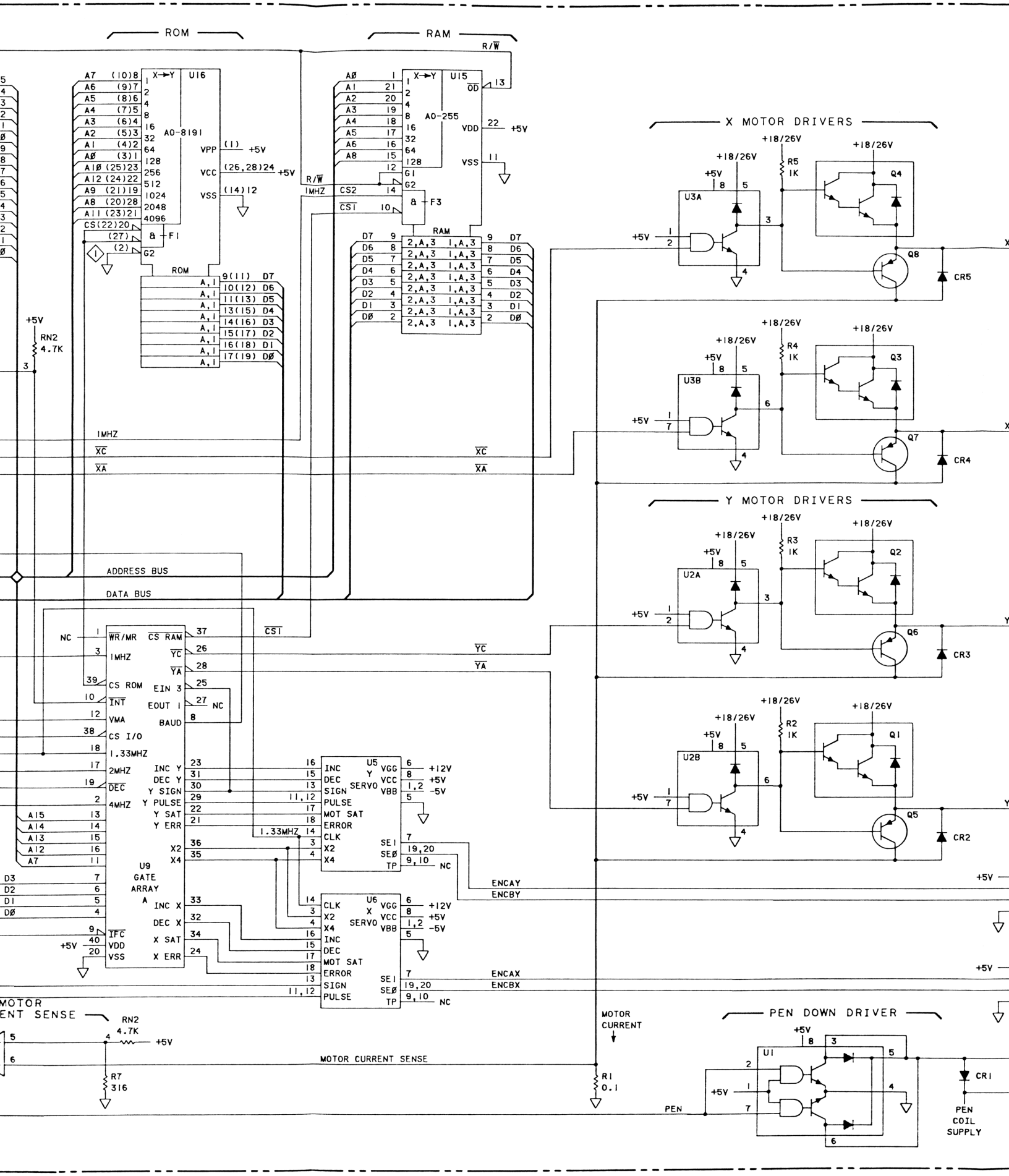
ROM
RAM
U16
A0-8191
U15
A0-255
X MOTOR DRIVERS
Y MOTOR DRIVERS
PEN DOWN DRIVER
ADDRESS BUS
DATA BUS
U9
GATE
ARRAY
U5
U6
SERVO
MOTOR CURRENT SENSE
MOTOR CURRENT
PEN
PEN COIL SUPPLY
ENCAY
ENCBY
ENCAX
ENCBX
RN2
4.7K
R7
316
R1
0.1
R5
1K
R4
1K
R3
1K
R2
1K
+18/26V
+5V
+12V
-5V
1MHZ
1.33MHZ
NC

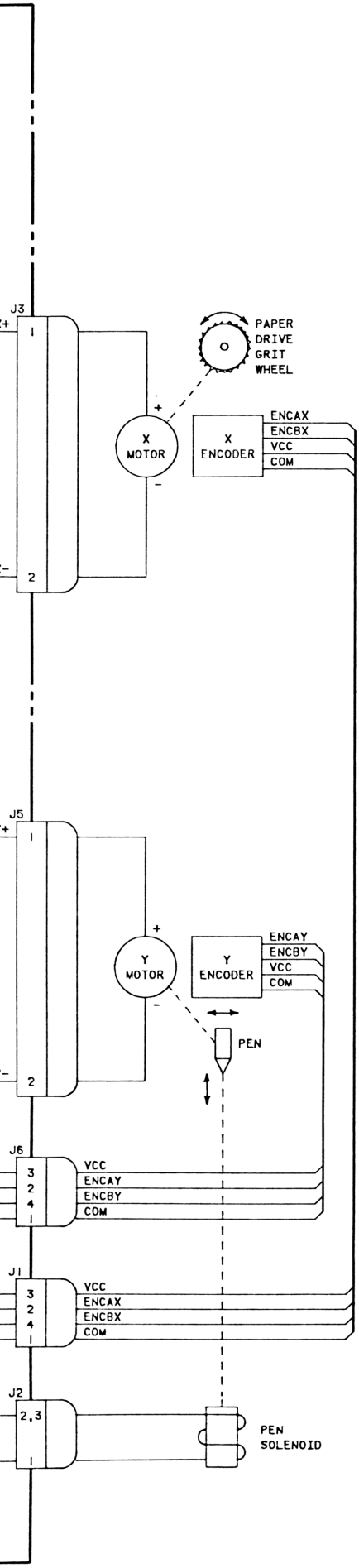

1 U16 MAY BE EITHER A 24-PIN ROM OR A 28-PIN EPROM. IN SOME CASES, A 24-PIN ROM MAY BE USED IN A 28-PIN SOCKET. IF SO, THE PACKAGE MUST BE INSERTED TWO SPACES DOWNWARD IN THE SOCKET. THAT IS, PIN 1 OF THE ROM IS IN PIN 3 OF THE SOCKET, ETC. THE U16 PIN NUMBERS IN PARENTHESES ON THE SCHEMATIC APPLY TO THE EPROM. A TRACE ON THE PRINTED CIRCUIT BOARD CONNECTS PINS 22 AND 27 ON THE SOCKET TO THE CHIP SELECT SIGNAL (FROM U9). IF AN EPROM IS USED, PIN 22 OF THE EPROM MUST BE DISCONNECTED FROM THE CHIP SELECT LINE (PIN 27) AND CONNECTED TO CIRCUIT COMMON.

Figure 5-16. Schematic Diagram, HP-IB, Option 002 **E**

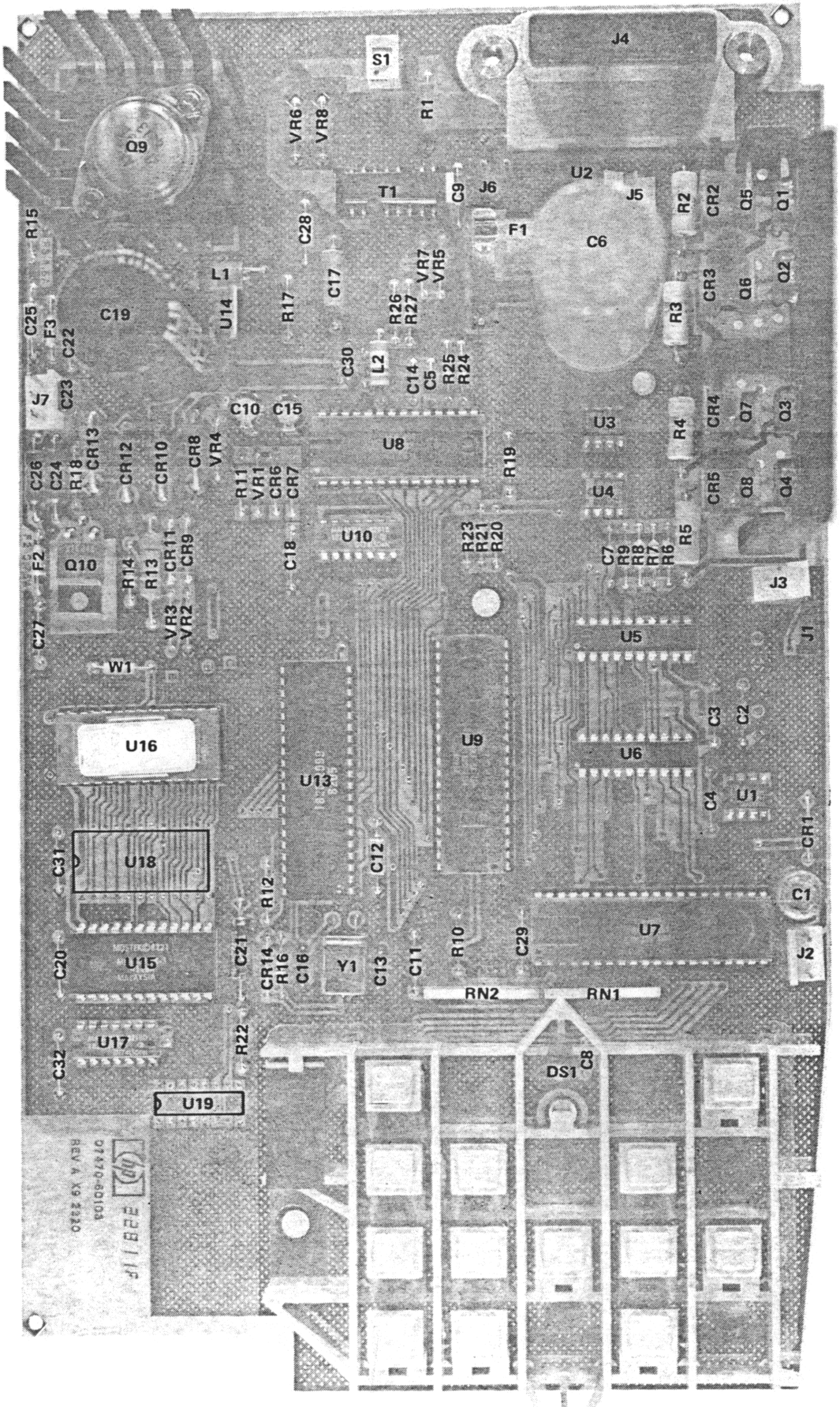
J4
S1
R1
VR6
VR8
Q9
U2
T1
C9
J6
J5
R2
CR2
Q5
Q1
R15
C28
F1
C6
F1
C17
VR7
VR5
CR3
Q6
Q2
C25
F3
C22
C19
U14
R17
R26
R27
R3
C30
L2
C14
C5
R25
R24
J7
C23
C10
C15
U3
R4
CR4
Q7
Q3
CR13
CR12
CR10
CR8
VR4
U8
R19
C26
C24
R18
R11
VR1
CR6
CR7
U4
CR6
Q8
Q4
F2
Q10
R14
R13
CR11
CR9
C18
U10
R23
R21
R20
C7
R9
R8
R7
R6
R5
J3
C27
VR3
VR2
U5
J1
W1
U16
U9
U6
C3
C2
U13
C4
U1
C31
U18
C12
CR1
R12
C1
U7
C20
U15
C21
CR14
R16
C16
Y1
C13
C11
R10
C29
J2
RN2
RN1
C32
U17
R22
DS1
C8
U19
REV A X9 2320
07470-60103
3238 1/F

7470-A-44-1

PART OF A1 MAIN PCA 07470-60103 (HP-IL OPTION 003)

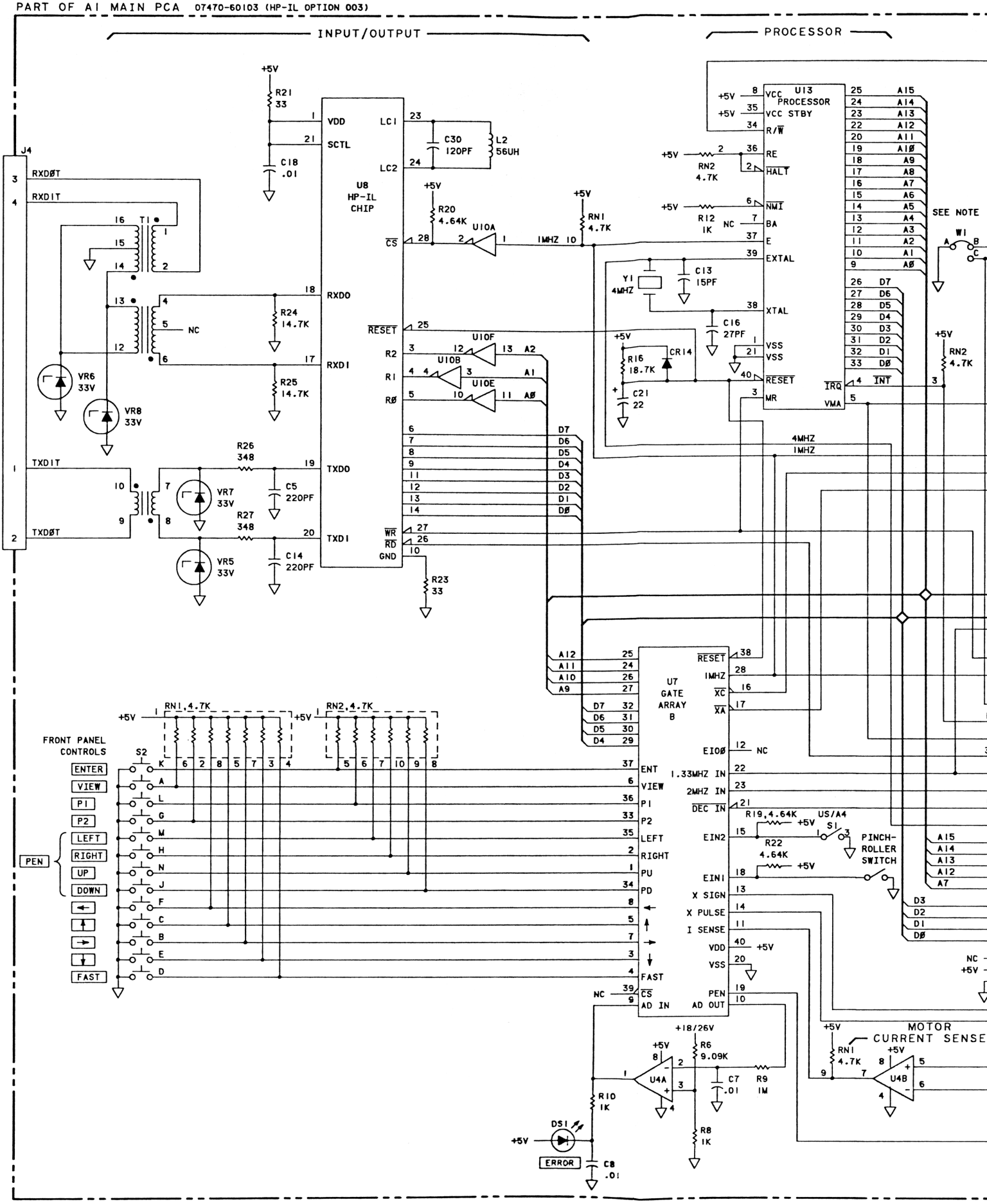

7470-J-41-1

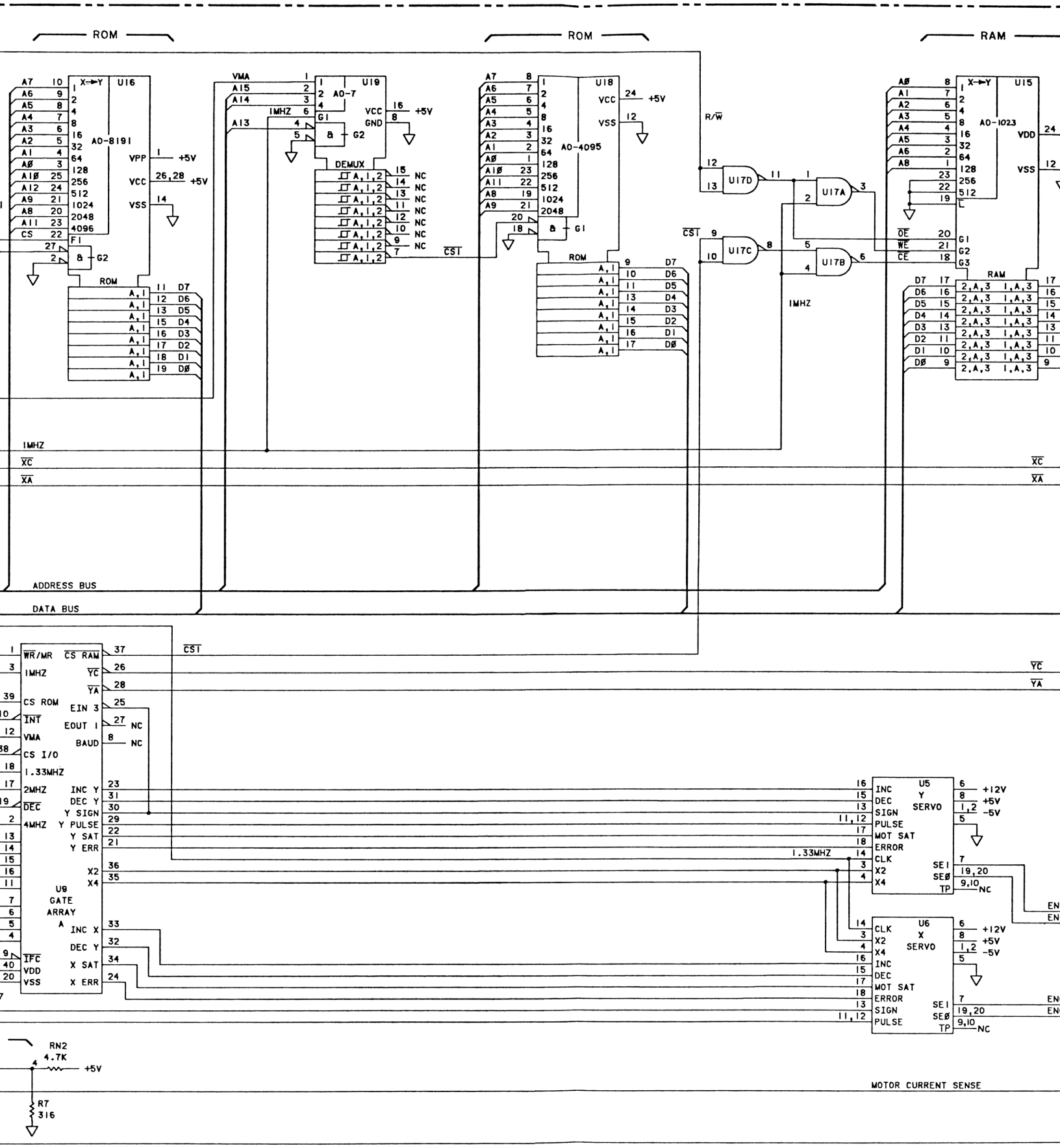
ROM
ROM
RAM
U16
AO-8191
U19
AO-7
DEMUX
U18
AO-4095
U15
AO-1023
U17D
U17C
U17A
U17B
R/W
CST
1MHZ
XC
XA
ADDRESS BUS
DATA BUS
U9
GATE
ARRAY
A
WR/MR
CS RAM
CS ROM
INT
VMA
CS I/O
1.33MHZ
2MHZ
DEC
4MHZ
EIN 3
EOUT 1
BAUD
INC Y
DEC Y
Y SIGN
Y PULSE
Y SAT
Y ERR
X2
X4
INC X
DEC Y
X SAT
X ERR
IFC
VDD
VSS
YC
YA
U5
Y
SERVO
U6
X
SERVO
INC
DEC
SIGN
PULSE
MOT SAT
ERROR
CLK
SE1
SEØ
TP
+12V
+5V
-5V
RN2
4.7K
R7
316
MOTOR CURRENT SENSE

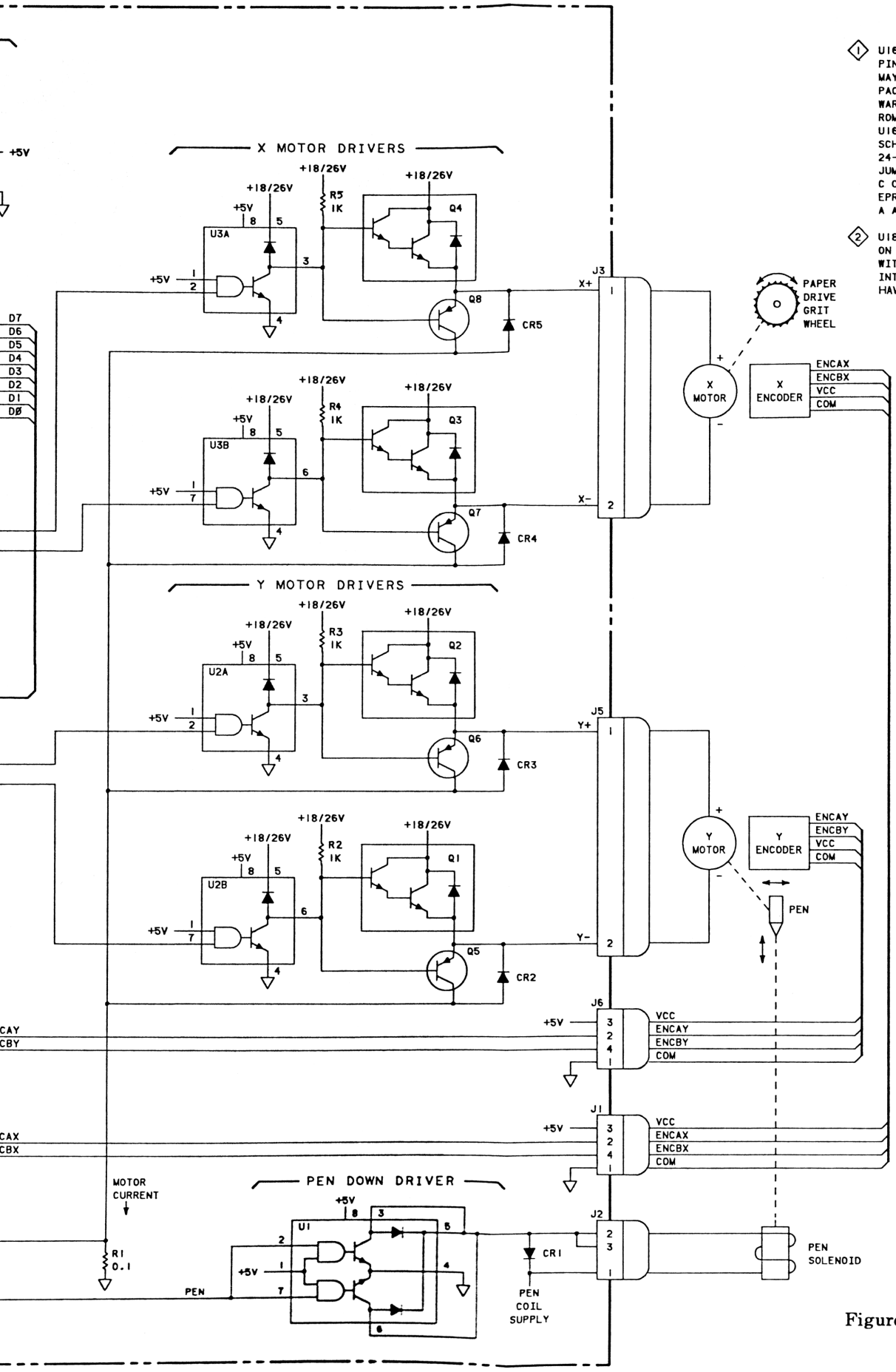

NOTES:

1. U16 MAY BE EITHER A 24-PIN ROM OR A 28-PIN EPROM. IN SOME CASES, A 24-PIN ROM MAY BE USED IN A 28 PIN SOCKET. IF SO, THE PACKAGE MUST BE INSERTED TWO SPACES DOWNWARD IN THE SOCKET. THAT IS, PIN 1 OF THE ROM IS IN PIN 3 OF THE SOCKET, ETC. THE U16 PIN NUMBERS IN PARENTHESES ON THE SCHEMATIC APPLY TO THE EPROM. WHEN A 24-PIN ROM IS USED IN A 28-PIN SOCKET, JUMPER W1 MUST CONNECT POINT B TO POINT C ON THE PRINTED CIRCUIT BOARD. IF A 28-PIN EPROM IS USED, W1 MUST CONNECT POINTS A AND B.

2. U18 AND U19 ARE NOT PRESENT ON SOME ASSEMBLIES. ASSEMBLIES WITHOUT THESE ICS ARE INTERCHANGEABLE WITH THOSE THAT HAVE THEM.

Figure 5-17. Schematic Diagram, HP-IL, Option 003

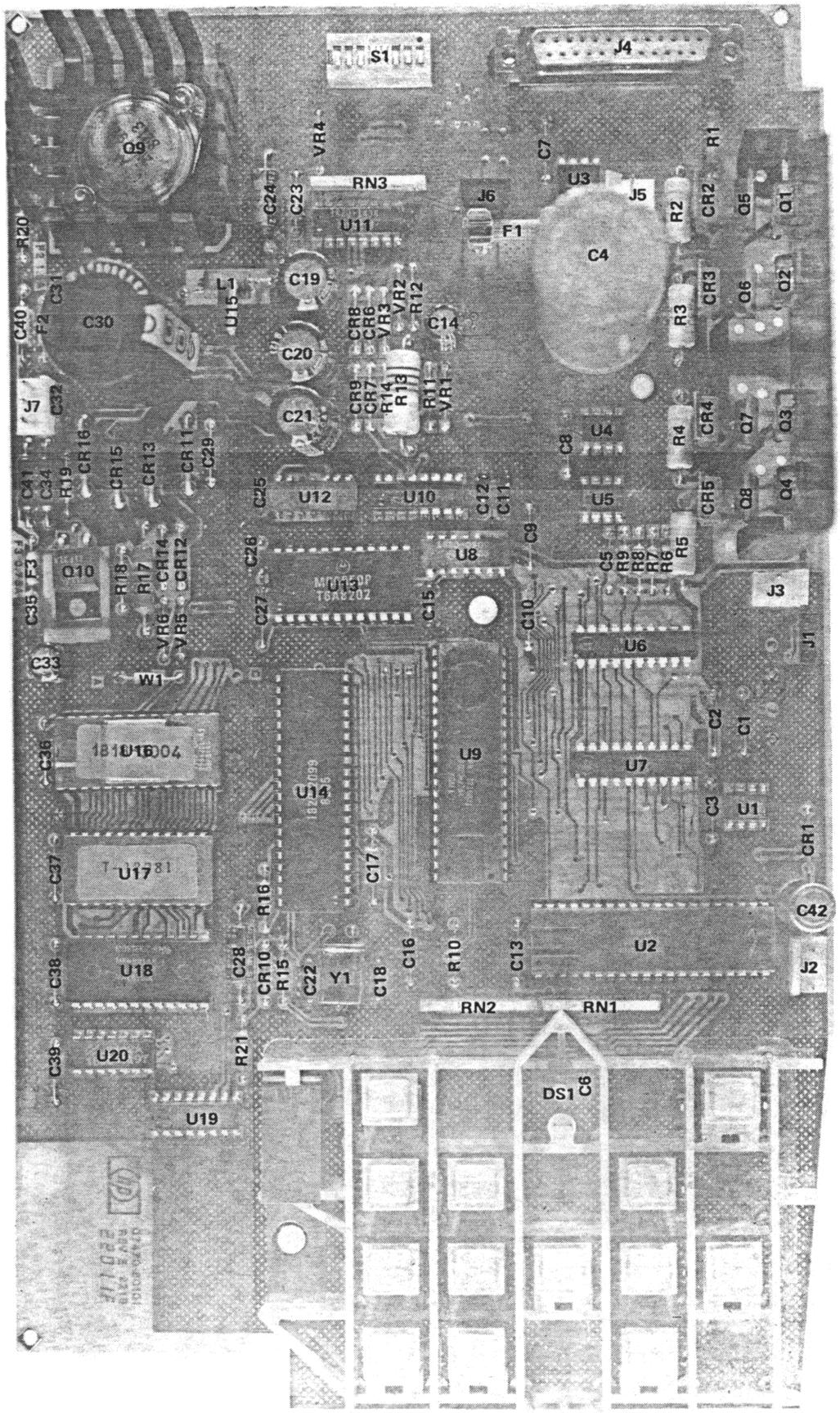

7470-A-43-1

OPTION 001
07470-60101

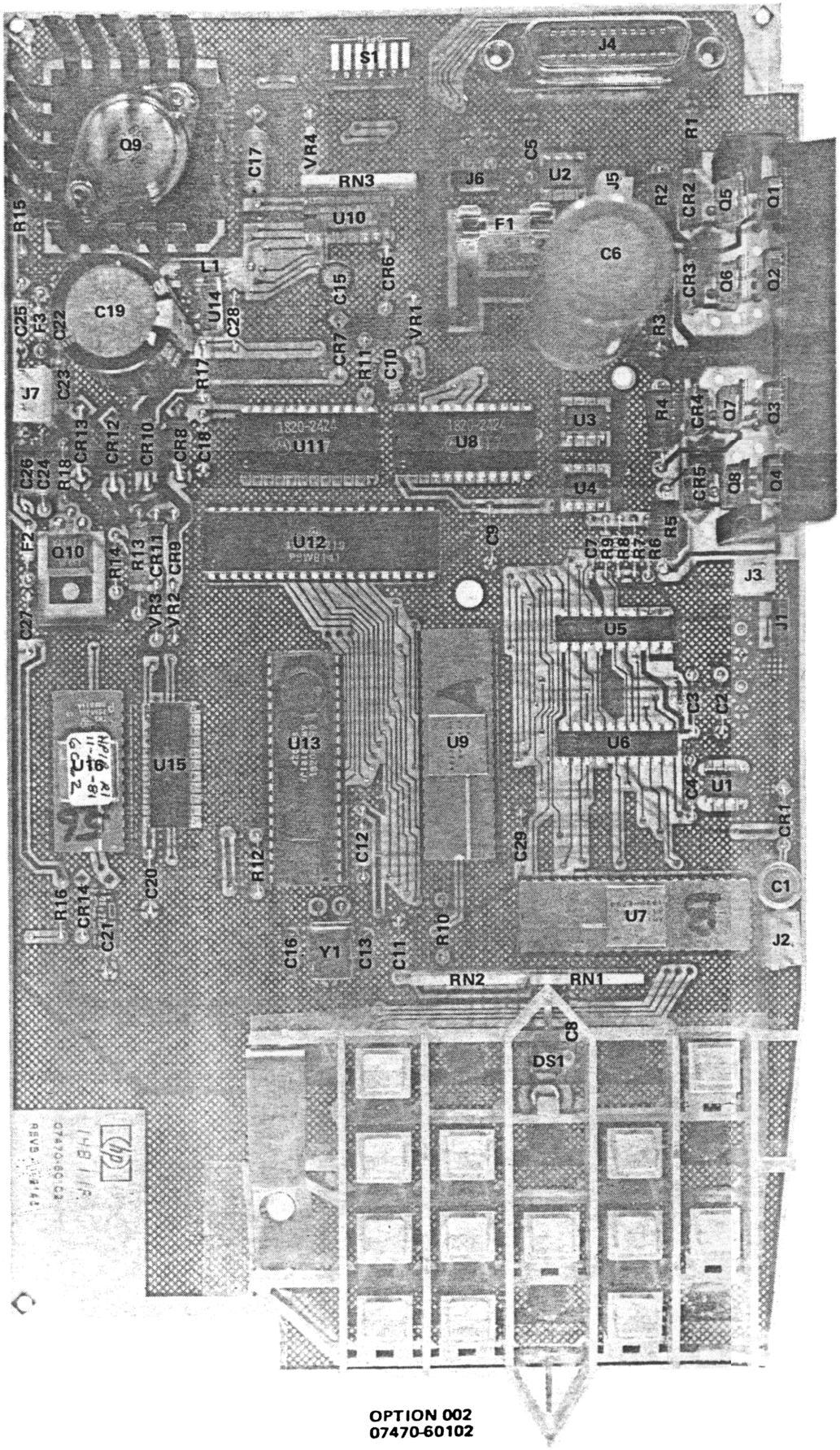

7470-A-23-1

OPTION 002
07470-60102

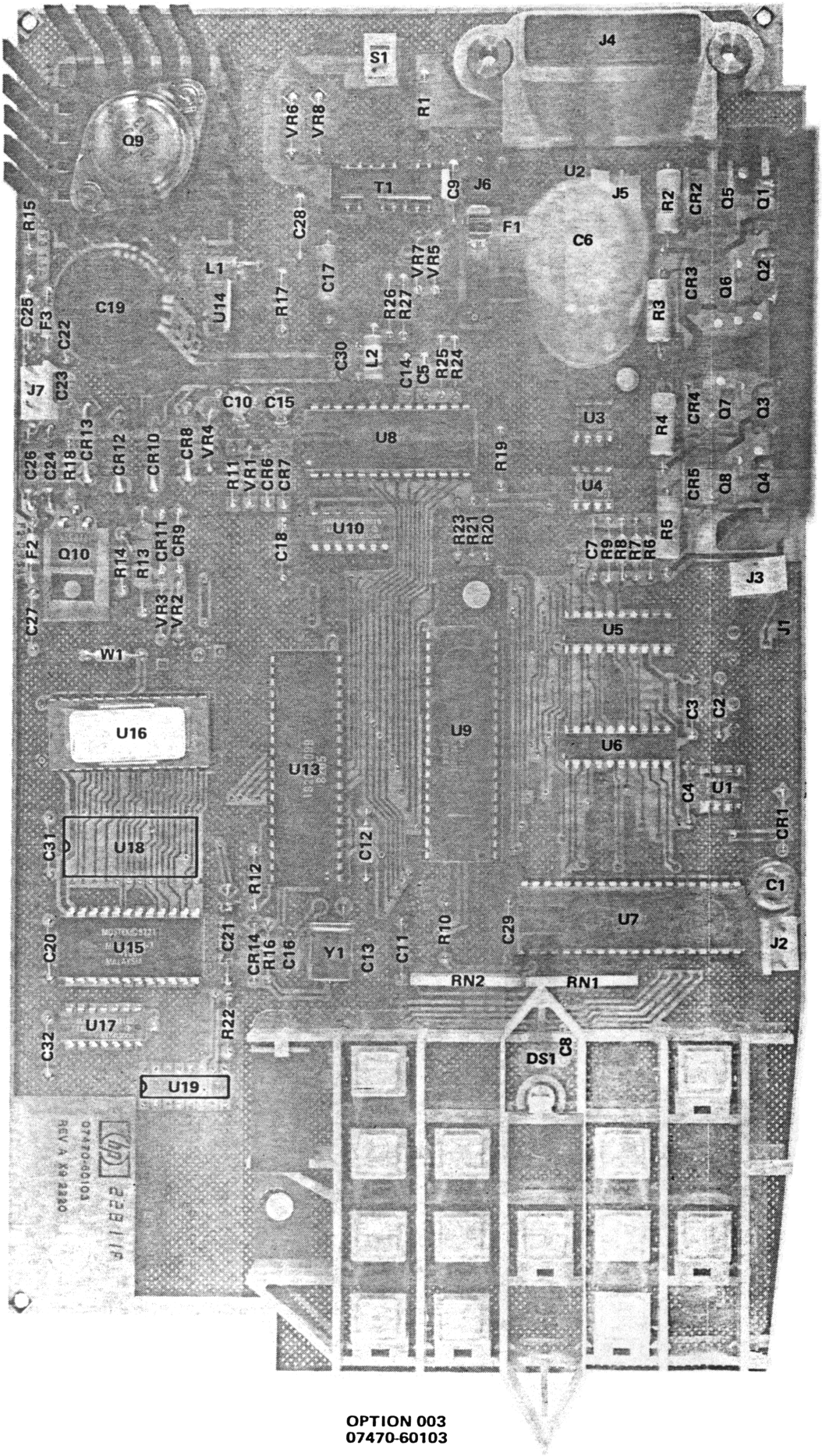

7470-A-44-1

OPTION 003
07470-60103

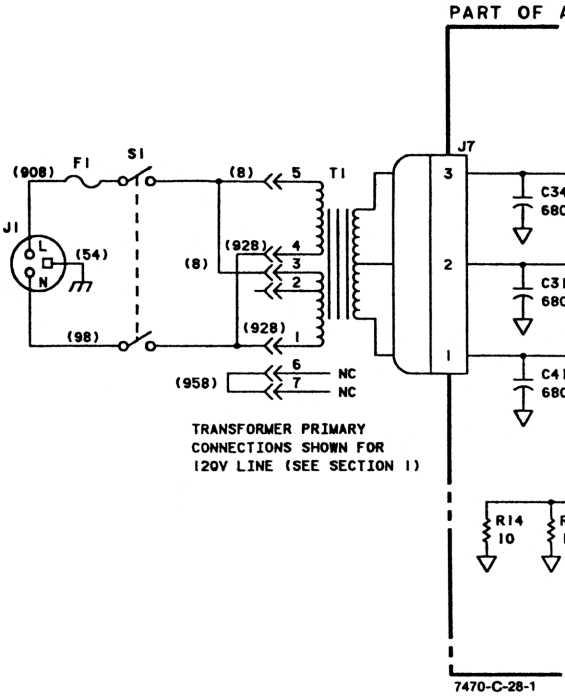
PART OF A
(908)
F1
S1
(8)
5
T1
J7
3
J1
L
N
(54)
(928)
4
3
2
(8)
2
(98)
(928)
1
1
6
7
(958)
NC
NC
C34
680
C31
680
C41
680
TRANSFORMER PRIMARY
CONNECTIONS SHOWN FOR
120V LINE (SEE SECTION 1)
R14
10
7470-C-28-1

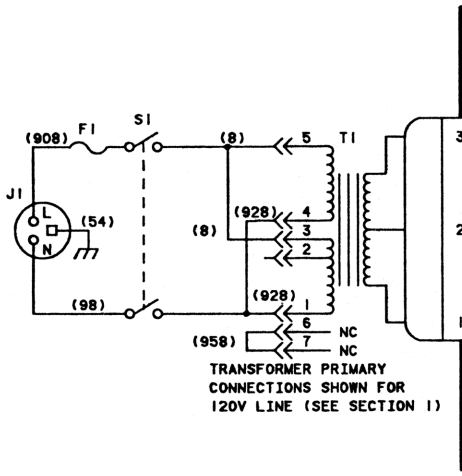
(908)
F1
S1
(8)
5
T1
J1
L
N
(54)
(928)
4
3
2
(8)
(98)
(928)
1
6
7
(958)
NC
NC
TRANSFORMER PRIMARY
CONNECTIONS SHOWN FOR
120V LINE (SEE SECTION 1)

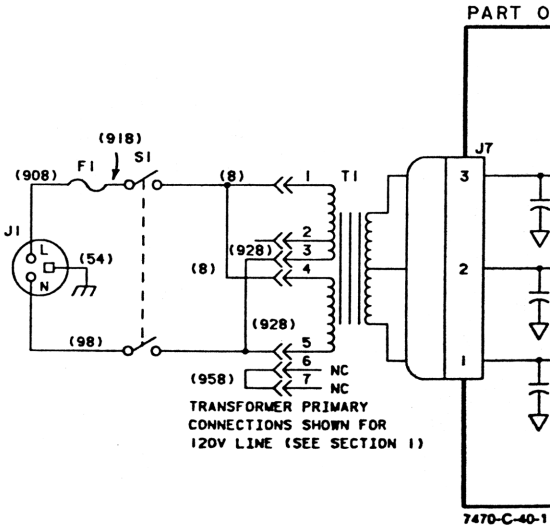
PART O
(918)
(908)
F1
S1
(8)
1
T1
J7
3
J1
L
N
(54)
2
(928)
3
4
(8)
2
(98)
(928)
5
6
7
(958)
NC
NC
TRANSFORMER PRIMARY
CONNECTIONS SHOWN FOR
120V LINE (SEE SECTION 1)
1
7470-C-40-1

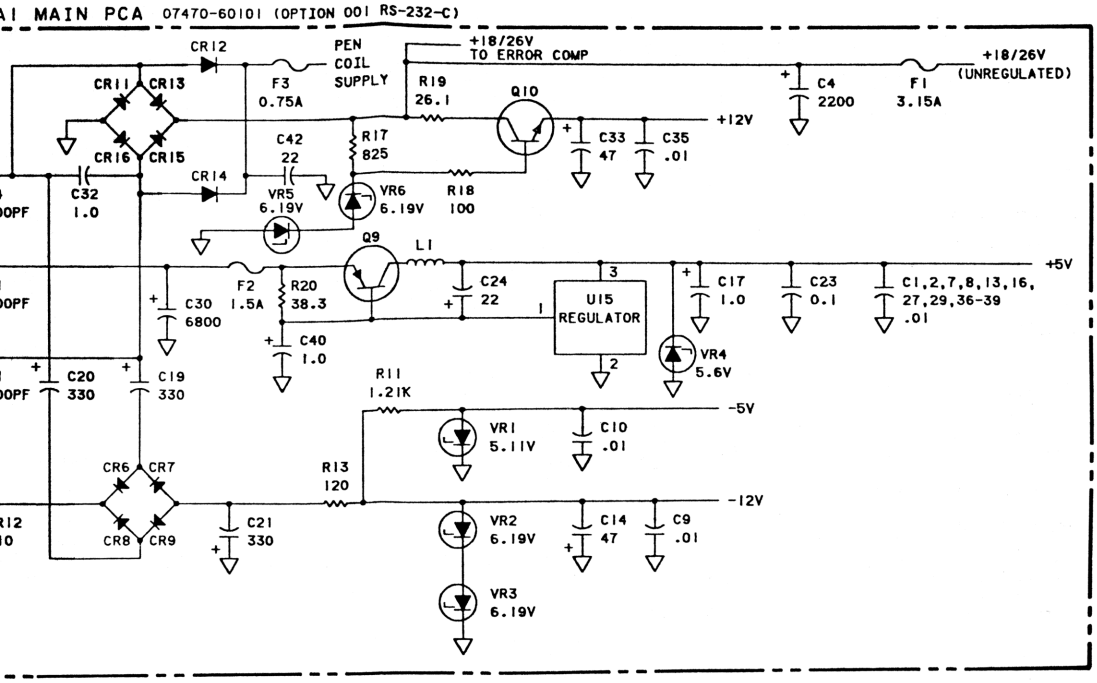

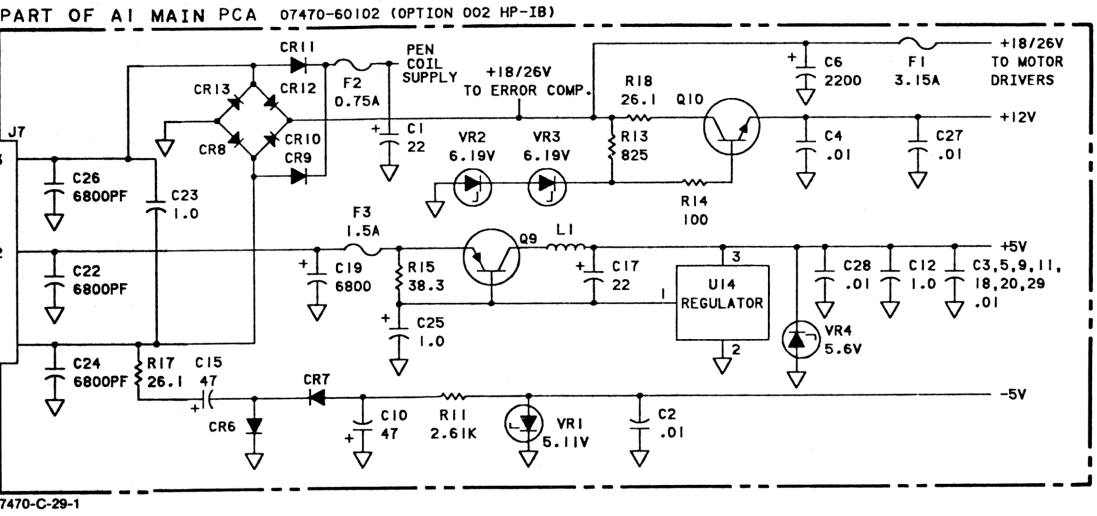

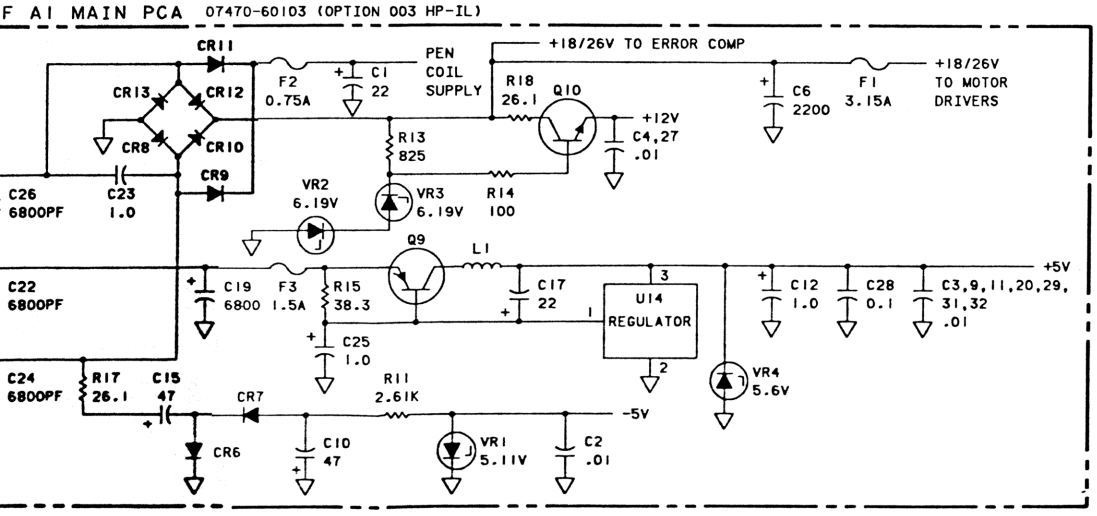

Figure 5-18. Schematic Diagrams, Power Supplies